The Most Versatile **TOOL IN YOUR SHOP!**

TIPS & TRICKS for Accurate Layouts

Foolproof Finishes for **SMALL PROJECTS**

Woodsmith®

Woodsmith.com

Vol. 36 / No. 215

Woodsmith 35 YEARS 1979 - 2014

FLEXIBLE, 4-SQUARE COFFEE TABLE

INSIDE:

Shop-Tested Router Table Joinery Technique

Maximize Dust Collection — Here's How

7 Add-Ons to Get the Most from Your Workbench

Oct/Nov 2014
Display Until Dec. 02, 2014
$4.95US
11
0 71896 48442 7
A Publication of August Home Publishing

Woodsmith®

PUBLISHER Donald B. Peschke

EDITOR Bryan Nelson
MANAGING EDITOR Vincent Ancona
SENIOR EDITOR Wyatt Myers
ASSOCIATE EDITOR Dennis Perkins
ASSISTANT EDITOR Robert Kemp
CONTRIBUTING EDITORS Phil Huber, Randall A. Maxey, Dennis Volz
EXECUTIVE ART DIRECTOR Todd Lambirth
SENIOR ILLUSTRATORS Harlan V. Clark, Erich Lage, David Kallemyn
SENIOR GRAPHIC DESIGNER Bob Zimmerman
GRAPHIC DESIGNER Becky Kralicek
GRAPHIC DESIGN INTERN Ryan C. Meier
CONTRIBUTING ILLUSTRATORS Dirk Ver Steeg, Peter J. Larson

CREATIVE DIRECTOR Ted Kralicek
ASSISTANT DESIGN DIRECTOR Chris Fitch
SENIOR PROJECT DESIGNER Jim Downing
PROJECT DESIGNER/BUILDER John Doyle
CAD SPECIALIST Steve Johnson
SHOP CRAFTSMEN Steve Curtis, Dana Myers
SENIOR PHOTOGRAPHERS Crayola England, Dennis Kennedy
ASSOCIATE STYLE DIRECTOR Rebecca Cunningham
SENIOR ELECTRONIC IMAGE SPECIALIST Allan Ruhnke
PRODUCTION ASSISTANT Minniette Johnson
VIDEO EDITOR/DIRECTOR Mark Hayes
VIDEO PRODUCTION SPECIALIST Patrick McDaniel

Woodsmith® (ISSN 0164-4114) is published bimonthly by August Home Publishing Company, 2200 Grand Ave, Des Moines, IA 50312.
Woodsmith® is a registered trademark of August Home Publishing.
Copyright© 2014 August Home Publishing Company. All rights reserved.
Subscriptions: Single copy: $4.95.
Canadian Subscriptions: Canada Post Agreement No. 40038201. Send change of address information to PO Box 881, Station Main, Markham, ON L3P 8M6. Canada BN 84597 5473 RT
Periodicals Postage Paid at Des Moines, IA, and at additional offices.
Postmaster: Send change of address to *Woodsmith*, Box 37106, Boone, IA 50037-0106.

WoodsmithCustomerService.com

ONLINE SUBSCRIBER SERVICES

- **VIEW** your account information
- **RENEW** your subscription
- **CHECK** on a subscription payment
- **PAY** your bill
- **CHANGE** your mailing or e-mail address
- **VIEW/RENEW** your gift subscriptions
- **TELL US** if you've missed an issue

CUSTOMER SERVICE **Phone: 800-333-5075**

SUBSCRIPTIONS
Customer Service
P.O. Box 842
Des Moines, IA 50304-9961
subscriptions@augusthome.com

EDITORIAL
Woodsmith Magazine
2200 Grand Avenue
Des Moines, IA 50312
woodsmith@woodsmith.com

AUGUST HOME PUBLISHING COMPANY Printed in U.S.A.

from the editor

Sawdust

When we make project selections for the magazine, the design of the project is key. We're always looking for something exciting and visually appealing, like the coffee table on the cover. The modular, cantilevered design is eye-catching. Plus, you can configure the table multiple ways.

The final result looks great, but honestly, it's the design details you can't see that are even more interesting. To create the open, cantilevered look, each section of the table only has two "legs," so they have to be rock solid. For the initial prototype, Ted, our creative director, had used a set of metal strap ties to connect the legs to the base and top. They provided more than enough strength and stiffness to the assembly.

The problem is the four sections required a total of 32 brackets. After pricing them out, the hardware was going to run well over $100. Although they would have done the job, that seemed a bit extreme. Ted thought it over for a few days and came back with a shop-made plywood version. You can see what I'm talking about on page 24. The plywood brackets worked out great, with the advantage of a being a low-cost solution.

Your budget, of course, is a key aspect to the design of any project. We all want a project that looks great and it has to meet our needs. But how it's actually built, and the resulting final cost, plays into the final design decision. So the next time you're considering a project, look past what you see and check out the interesting things beneath the surface.

Bryan

contents

No. 215 October/November 2014

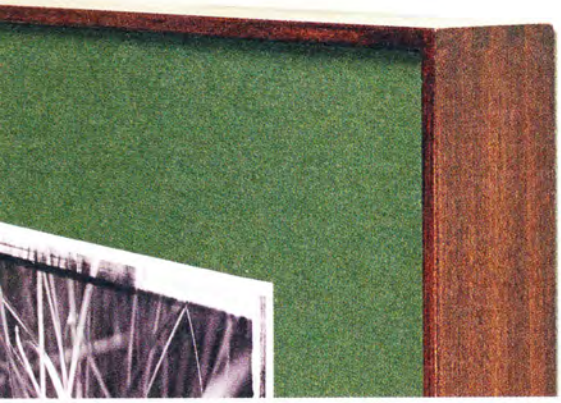

17

20

30

Departments

from our readers
Tips & Techniques 4

all about
Maximizing Dust Collection. 8

tools of the trade
Using a *Dremel Fortiflex*. 10

jigs & fixtures
7 Workbench Add-Ons 12

techniques from our shop
Router Table Box Joints 14

tips from our shop
Shop Notebook 28

woodworking technique
Spraying a Foolproof Finish 42

working with tools
Router Guide Bushings 44

hand tool skills
The Versatile Block Plane 46

woodworking essentials
Layout Tips & Tricks 48

in the mailbox
Q & A 50

Projects

weekend project
Box-Jointed Picture Frames 17

Feature your favorite photographs or prized art in a set of great-looking picture frames. The simple design and joinery makes them an easy-to-build weekend project.

designer project
4-Square Coffee Table 20

The look and modular design of this coffee table make it a versatile piece. But it's the unique construction techniques that will provide the woodworking challenges.

heirloom project
Cabinet on Stand 30

This classic project will test your skills. But it's the stylish design that friends and family will talk about. And solid-wood construction means it will last for generations.

from our readers

Tips & Techniques

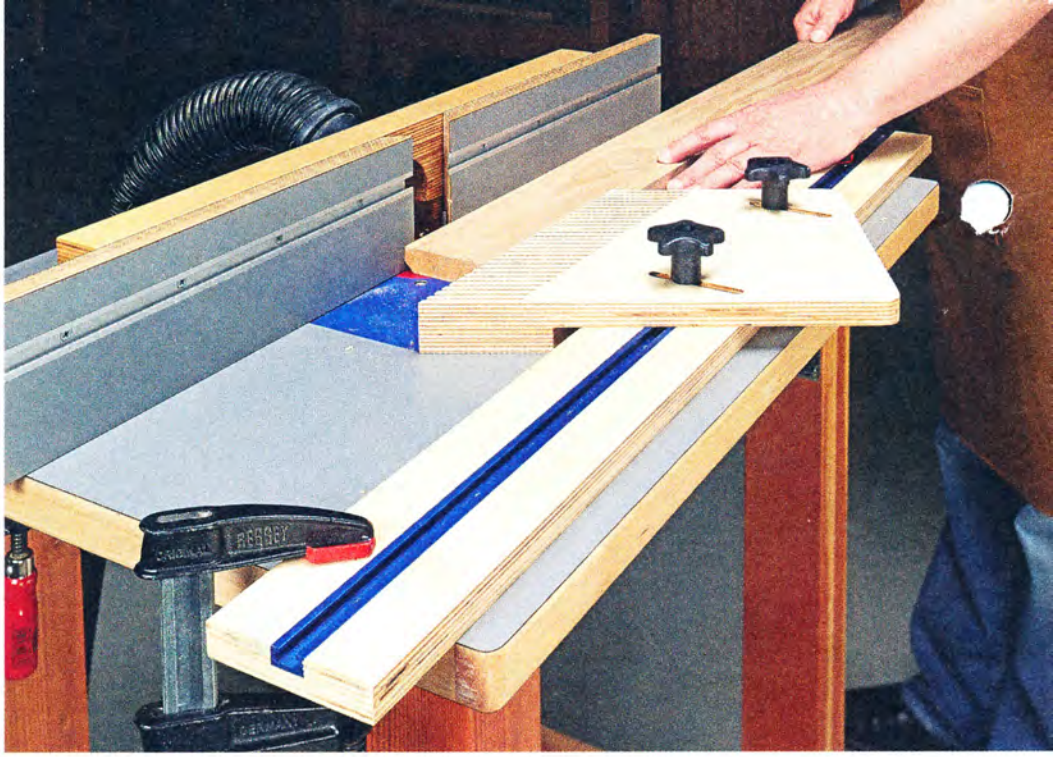

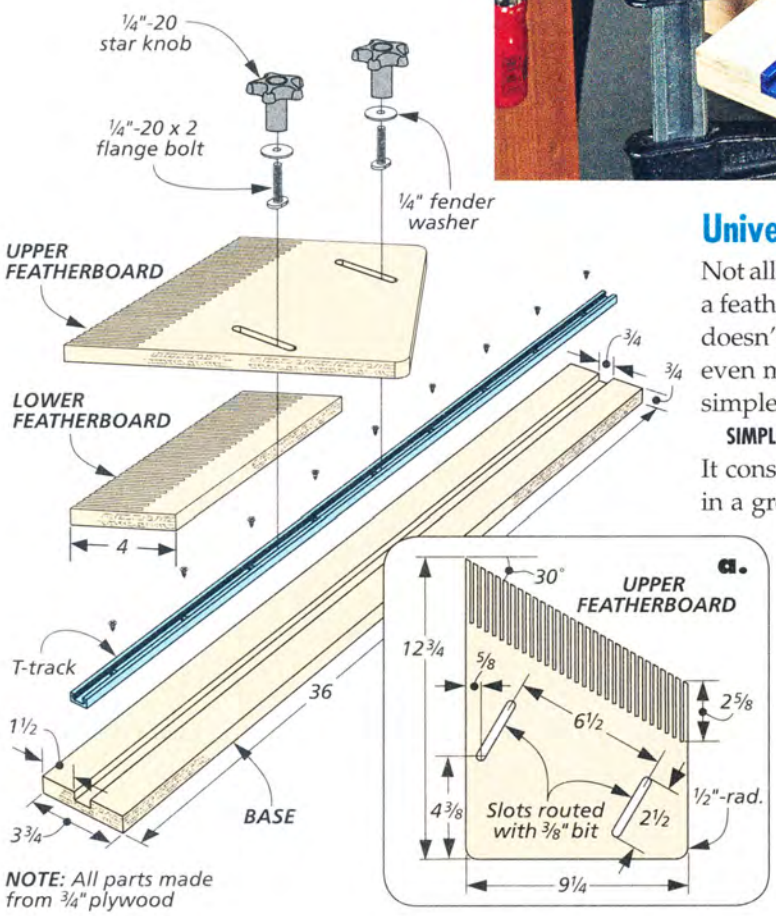

NOTE: *All parts made from 3/4" plywood*

Universal Sliding Featherboard

Not all of my stationary tools have a convenient location to clamp a featherboard to their surface. And the fact that my router table doesn't have a miter gauge slot made coming up with a solution even more of a challenge. To address this problem, I made this simple sliding featherboard system.

SIMPLE CONSTRUCTION. The featherboard system is easy to build. It consists of a plywood base with a section of T-track recessed in a groove cut in the surface of the base. The finger end of the featherboard has two layers. This allows the fingers to sit flush on the machine surface. It's easiest to cut the upper half of the featherboard to shape first and then glue the lower section in place. I then cut evenly spaced fingers at the table saw. Two adjustment slots are located on the upper section for the knobs and bolts.

HOW IT WORKS. I simply clamp the featherboard system to the top of my table saw or router table. After sliding the featherboard into position against a workpiece, lock it in place using the knobs.

Serge Duclos
Delson, Quebec

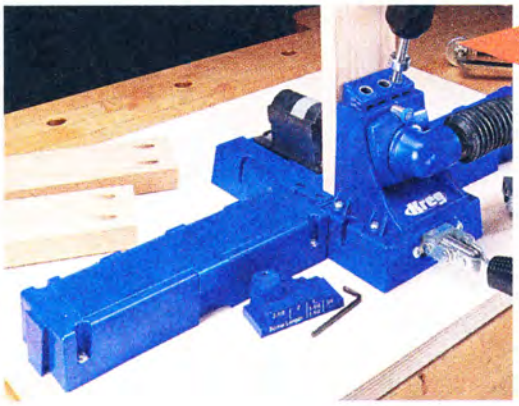

Win This Kreg K5 Jig

Simply send us your favorite shop tips. If your tip or technique is selected as the featured reader's tip, you'll win a *Kreg K5 Jig* just like the one shown here. To submit your tip or technique, just go online to *Woodsmith.com* and click on the link, "SUBMIT A TIP." There you can submit your tip and upload your photos for consideration.

The Winner!

Congratulations to Mike Thaman, the winner of this *Kreg K5 Jig*. To find out how you can win this jig, check out the information at left.

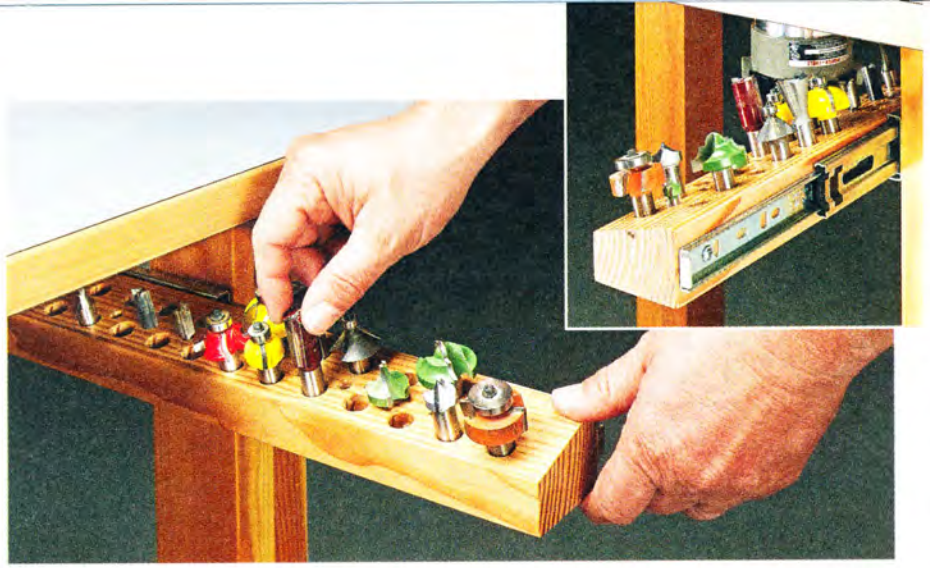

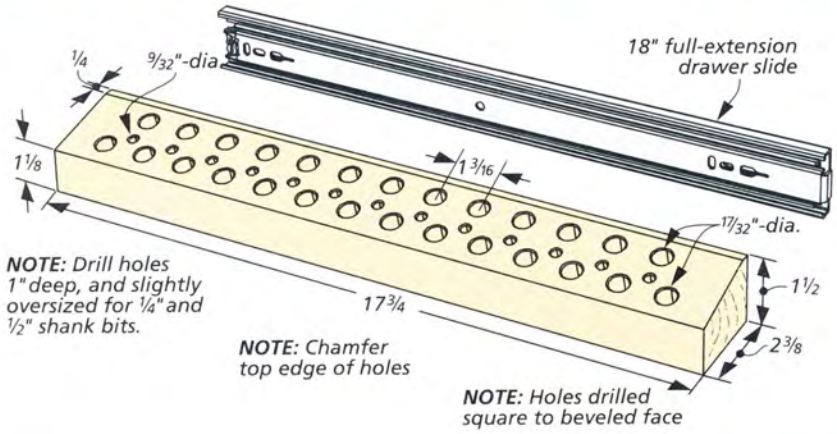

Out-of-the-Way Router Bits

I recently made a router bit storage rack from a solid-wood blank and mounted it to the outside of my router table's base. However, in my small, cramped shop, I was constantly snagging my pant leg or shop apron on the rack as I walked past. I wanted to keep my storage rack accessible, but out of the way. The solution to my problem came to me on a recent trip to the hardware store.

DRAWER SLIDE. Instead of installing the router bit storage rack to the outside of my router table base, I mounted the rack to a full-extension drawer slide. I then installed the whole assembly underneath my router table as shown at left. Now, to access my router bits, it's as simple as sliding the rack out and selecting the bit I need. And the best thing is, no more snagged pants.

Mark Worthington
Nephi, Utah

Super Paper

Ok, so it's not paper, but over the years I have found many uses for this versatile material known as High Impact Polystyrene, or HIPS. It's thin and flexible, yet stiff and dimensionally stable. It's tear resistant, waterproof, and can be marked with a pen or pencil. Plus, it's easy to cut with scissors or a knife. Best of all, HIPS is sold in large sheets that are relatively inexpensive.

UNLIMITED USES. It's very simple to make full-size patterns of curved project parts, like the chair leg shown above. The patterns can be rolled up for transport, or stored flat in minimal space.

Because of HIPS low cost, it's an attractive material for use in one-time applications. A small piece can be edged with pinking shears to make a glue spreader. Another can be used to mix small amounts of epoxy. Pick up some of this versatile material at a hobby store and you're sure to find several uses of your own.

Dennis Johnson
Winnipeg, Manitoba

DIGITAL WOODSMITH

SUBMIT TIPS ONLINE

If you have an original shop tip, we would like to hear from you and consider publishing your tip in one or more of our publications. Jump online and go to:

Woodsmith.com
Click on the link,
"SUBMIT A TIP"

You'll be able to tell us all about your tip and upload your photos and drawings. You can also mail your tips to "Woodsmith Tips" at the editorial address shown on page 2. We will pay up to $200 if we publish your tip.

RECEIVE FREE ETIPS by EMAIL

Now you can have the best, time-saving secrets, solutions, and techniques sent directly to your email inbox. Just go to

Woodsmith.com
and click on
"WOODSMITH TIPS"

You'll receive one of our favorite tips each and every week.

Biscuit Joiner Spline Slots

I am always looking for new and creative ways to get the most from my woodworking tools. Recently while building several small boxes with decorative splines in the corners, it occurred to me that my biscuit joiner would do an excellent job of making the spline slots. All it needed was this simple-to-build jig that attaches to the fence on the joiner.

MAKING THE JIG. The biscuit joiner jig is easy to make from a piece of plywood. Start by cutting the vertical V-groove centered on the front face of the plywood workpiece. I did this at the table saw with the blade tilted to 45°. A couple of passes completes both sides of the groove. The important thing is that the V-groove opening ends up being 90°. This allows the jig to "wrap around" the corner of the workpiece.

Next up is a series of evenly spaced kerfs running horizontally across the face of the jig. These kerfs hold an acrylic (*Plexiglas*) index bar (illustration, below) that determines the location of the spline slots on the workpiece. In the case of my jig, the spline slots are 1" apart. I used ⅛"-thick acrylic so the kerfs can be made with a single pass across the table saw blade. The acrylic index bar should be a snug fit in the kerfs.

A vertical pencil line centered down the back face of the jig aids in aligning the jig to the joiner fence. The jig is positioned so the bottom kerf is ¾" from the top of the joiner blade (top photo). This will locate the first spline slot ¾" down from the top of the box. Attach the jig to the joiner fence with screws.

CUTTING SPLINE SLOTS. To cut a spline slot, put the acrylic index bar in the appropriate kerf (middle photo, right) and rest the index bar on the top of the box (bottom photo, right) with the corner seated in the V-groove. Now just plunge the cutter into the corner for a perfect spline slot.

Greg Guertin
Norfolk, Virginia

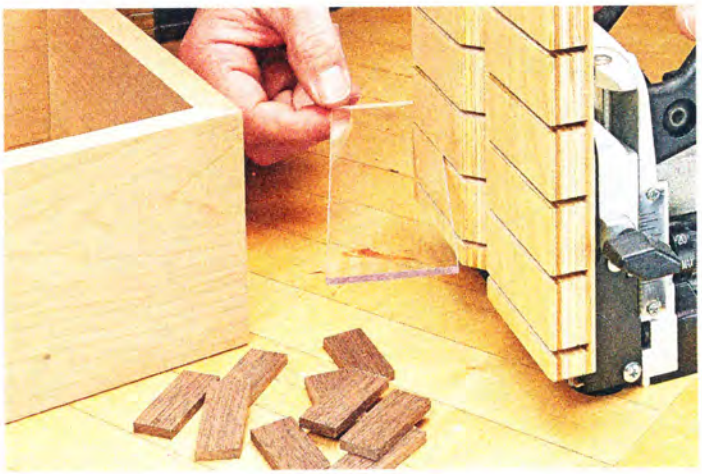

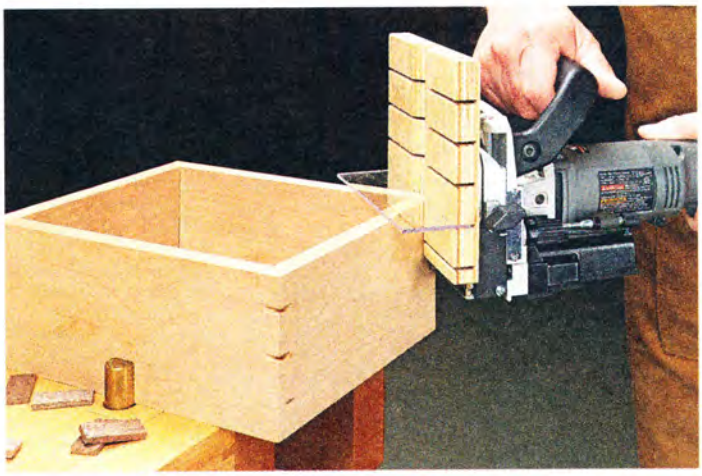

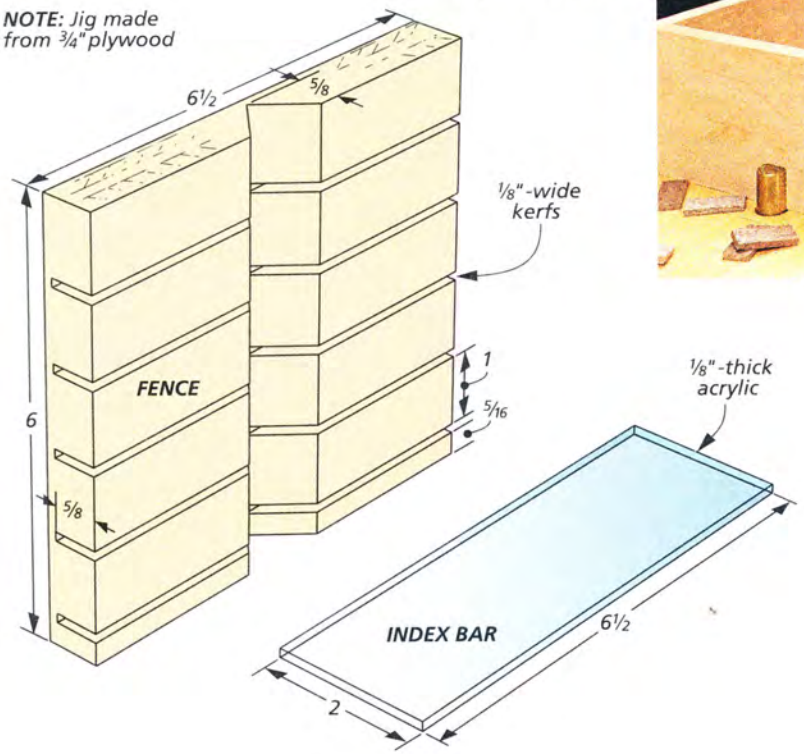

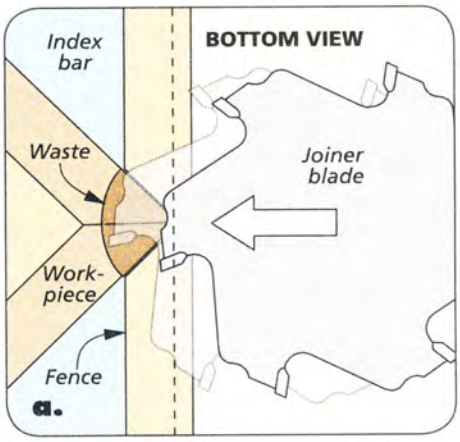

Knock-Down Worktable

Throwing a sheet of ¾" plywood on a couple of sawhorses to use as a temporary worksurface is a pretty common practice for many woodworkers. However, moving and storing these large sheets can be cumbersome and back-breaking. My solution was to make a knock-down worktable that could be moved and stored in sections.

BUILD THE TABLE. The tabletop is made up of three wide boards. Be careful to pick boards that are straight and relatively flat. I installed inexpensive hinges at the mating ends of the boards, as shown in the main photo. Several evenly spaced dowels positioned along the edges of the boards helps to keep the surfaces aligned during use.

Whenever I need a quick worksurface, it's easy to position the boards on sawhorses one at a time. Line up the hinges and tap the hinge pins in place to keep the table locked together. The dowels will ensure everything lines up quickly and easily.

Mike Thaman
Lima, Ohio

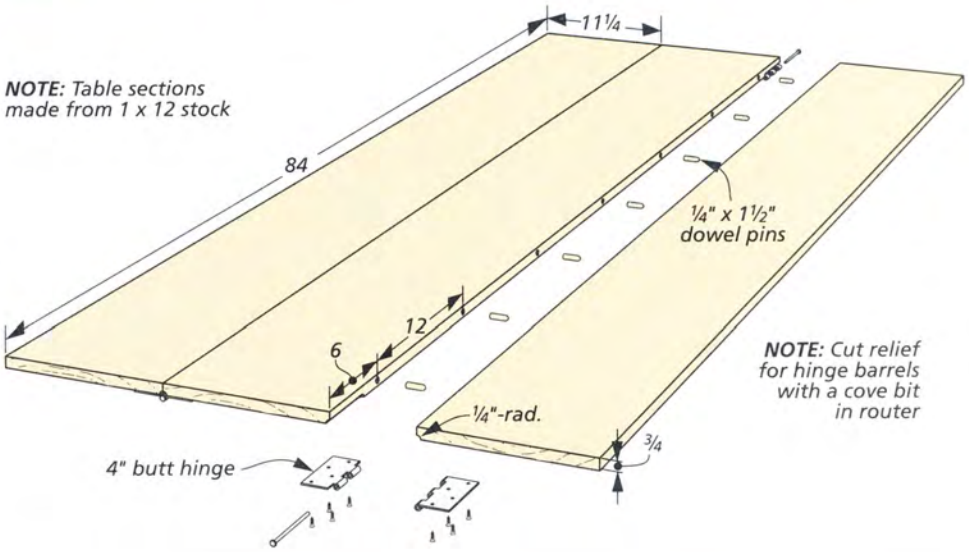

QUICK TIPS

Workmate Belt. *Stephen Carroll* of Covington, Washington uses his *Workmate* for a lot of tasks in his shop. So instead of wearing his cumbersome tool belt around all day, he simply straps it to the legs of the workstation and loads it up with his most-used tools.

Silicone Glue Brush. *Charles Mak* of Calgary, Alberta likes the silicone glue brushes sold by specialty woodworking suppliers, but finds the price a little too steep. Instead, he found a package of silicone basting brushes at the dollar store that work just as well.

assembling a Dust Collection Network

Corralling the dust created by the power tools in your shop is a challenging, but important task. The harmful physical effects of wood dust are well documented, not to mention it's more enjoyable to work in a clean shop. So adding a dust collector to your shop is money well spent. But buying a dust collector is just the first step on the path to keeping the air clean as you work.

SYSTEM. To get the most out of your dust collector, it has to be easy to use and dependable or you're liable to stop using it. This means upgrading your setup from a single, flexible hose connected to the dust collector. Convenience calls for plumbing the shop with a network of collection ports for all your major tools and maybe adding a hose to be shared by the seldom-used machines.

HOSE. The first thing most of us do is connect a couple of flexible hoses at the "Y" fitting on the dust collector and attach them to tools as we use them. But sharing two hoses among all your dust-producing tools and constantly swapping the hoses between them, gets old. And at some point, they'll get in the way lying on the floor.

Although hose is convenient, the inside walls are ribbed. This disrupts the airflow from the tool to the collector. I try to limit the use of hose to short runs from duct to tool or from the collector to the network. This is the best compromise. As to the kind of hose, I prefer to use high-quality, clear plastic hose with wire reinforcement — it doesn't puncture as easily as thinner hose.

DUCT OPTIONS. When it comes to choosing duct or pipes, you'll find that the top-of-the-line metal duct work is very expensive, with a typical shop needing several hundred dollars' worth of pipe, elbows, and connections. Schedule 20 PVC drain pipe, on the other hand, is more affordable, and a full line of fittings is as close as your local hardware store.

PVC ADAPTERS. While all the most common fittings, like 45° and 90° corners, "Y" and "T" junctions, and caps are

▼ Blast gates range from inexpensive plastic models to high-end metal units with improved performance.

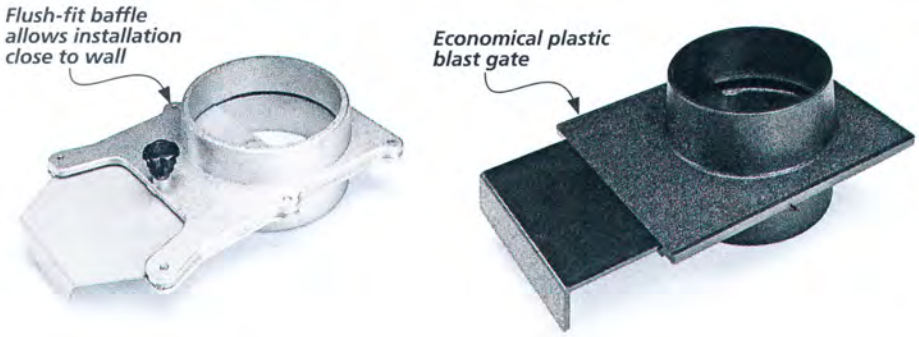

Stepping down from a 4" PVC pipe to a 2½" hose is simply a matter of installing a plastic reducer

▲ The hose clamp on the left requires a screwdriver for adjustments, while the one on the right can be tightened by hand.

▲ Without a remote control kit, you'll spend more time running to and from the dust collector than woodworking.

Instead of using a 90° elbow, connect two 45° fittings for smoother airflow

▲ An inexpensive adapter helps connect PVC to most dust collector attachments, like blast gates.

available for PVC, woodworking suppliers also sell a number of plastic fittings made for specific jobs. You'll want to add things like floor sweeps, blast gates, and collection chutes designed for specific tools like table saws, miter saws, and router tables. Refer to Sources on page 51 to see where to find them.

Unfortunately, these specialized fittings usually won't match the diameter of standard PVC. This shouldn't be a surprise, since neither was designed to work together, but it can be frustrating.

You'll need adapters, like the one shown in the margin photo at right, to go from PVC to plastic to help you build a tight-fitting, leakproof network.

STOP LEAKS. As I said earlier, even with a well-plumbed system, you'll usually still need a few short runs of hose for some connections. The joint between hose and plastic is often a place where leaks occur, so hose clamps are important. Two different types are shown in the left photo above. Both work well, but I prefer the convenience of a thumb screw for hoses that swap from one tool to another. You don't have to stop and get a tool to tighten a loose connection. The wire-style clamps fit better over the ridges in the hose, so I use them in the more permanent fittings.

BLAST GATES. Another key part of any network are the blast gates. They allow you to close down the parts of your network that aren't in use, thus increasing the flow to the tool you're using. There are several kinds available in plastic or metal (bottom left photos on the opposite page). Either can be connected to your network with a slip fit or clamps.

STATIC ELECTRICITY. The only downside to using PVC is that it produces a lot of static electricity. There's no need to worry about it sparking a fire or dust explosion. Nevertheless, you can get some nasty shocks when you touch the ducts. So you might want to address the problem by grounding the network. All it takes is a copper wire running through the ductwork and grounded to something metal in your shop. You can buy kits with wire and wire ties that make it a breeze.

REMOTE CONTROL. Finally, an item that I absolutely wouldn't be without is a remote control. There are several types, but most work like the one in the photo above. You plug the receiver into a power outlet and the dust collector into the receiver. Then you can carry the remote in an apron pocket and turn the system on when you need it.

With these tips in mind, you're ready to set up your own collection network and get the most out of your dust collector. And by making it easy to use, you'll be able to breathe easier in the shop. W

Airflow

Blast gates open and close the ducts, directing airflow to a single tool or accessory

Adapter

A floor sweep allows you to sweep up the day's sawdust and send it straight to the collector

using the Dremel Fortiflex

▲ The *Dremel Fortiflex* package includes the motor, flex shaft, handpiece, foot control, hanger, and an accessory pack.

Chances are you're already familiar with rotary tools like the *Dremel*. They're great for everything from sharpening your lawnmower blade to etching glass. The dozens of household tasks at which it excels won't fit here. You may even use it in the shop for detail sanding.

But the shape and weight of a conventional rotary tool can make it a bit awkward for some jobs. For example, if you try carving with one, it can be tough to maneuver into tight spaces. The tool will wear out your hand in a hurry.

You'll face the same problem with many other fine detail tasks like sanding or buffing small workpieces. Adding a flexible shaft makes it more comfortable, but this setup can be asking too much for the lower-powered rotary tools.

NEW DESIGN. *Dremel* has a new tool to address those concerns. The *Fortiflex* was designed for those tasks that work best with a flexible shaft. The margin photo shows everything that's included in the kit for only $239.

The *Fortiflex* motor unit hangs on a handy hanger that's included in the kit. This keeps it well out of the way when in use. And it lets you mount it just about anywhere. I just attached the hook to a piece of scrap stock and clamped the stock in my bench vise, as in the main photo above. With the motor out of the way, you're not impeded when you're working on a carving or other project.

THE SPECS. The 2.5-amp, ⅕-hp motor on the *Fortiflex* delivers plenty of power, more than twice that of a conventional rotary tool. The boost in power allows the larger motor to run cooler and more efficiently. You'll feel the difference immediately when you start to use it.

One of the features I like most about the *Fortiflex* is the foot pedal that controls the bit speed (ranging from 0 to 23,000 RPM). This is a welcome addition that allows you to focus more on the carving and less on the tool. Not only does this keep your hands free, but it also feels a lot safer than fumbling around looking for the switch on the tool body. Just lift your foot and the motor stops.

▲ The three-jaw chuck makes installing bits with different shank diameters a snap. This beats changing collets for every different size.

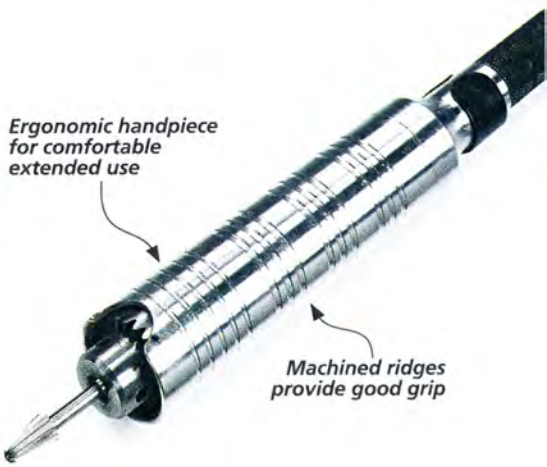

▲ The handpiece is comfortable and easy to use. It stays cool even during a long session of carving.

Although the *Fortiflex* foot pedal works great, you might miss the RPM indicator found on the conventional rotary tools. But after a while, you won't find this to be a problem. You'll develop a feel for the right speeds if you remember that buffing, sanding, and brushing should be done with the foot pedal about halfway down (15,000 RPM). For carving and most cutting jobs, you want the highest speed you can manage in the material.

HANDPIECE. Comfort is a difficult characteristic to rate, since everyone has different expectations and ways of working. But if you've ever had a long session with a typical rotary tool, then you're sure to appreciate the nicely balanced, lightweight aluminum handpiece. At 1" in diameter, the handpiece fits comfortably in your hand, even during extended periods of use.

The handpiece attaches to a 36" heavy-duty flex shaft. The shaft can take a lot of everyday use, too. It can bend in a 6" radius without affecting performance. And a new style of bearing system keeps the shaft and the handpiece cool.

CHUCK. The three-jaw chuck is a big improvement from the normal, fixed-diameter collets. The chuck works like a drill press chuck, with a key used to secure the bit. The chuck accepts any size accessory with a shank size up to 5/32". This versatility lets you use a variety of accessories.

GOES ANYWHERE. As I mentioned earlier, not having the entire weight of a rotary tool in your hand allows you greater control, especially for small, fine work. And with almost no vibration, there's less fatigue at the end of the day, as well. I found that I could get into tight spaces with my carving bits and make detailed cuts I couldn't with a conventional rotary tool. And when it comes to the job of removing waste from a carving, the *Fortiflex* powers my favorite carbide burrs for truly outstanding performance.

▲ You can really dig in with carbide carving burrs. The *Fortiflex* has plenty of power, so you don't have to worry about the tool stalling during a heavy cut.

▲ Polishing with a felt wheel is both quick and easy. The handpiece gives you all the control you need to polish the surface without skipping around.

▲ A foot pedal to control the speed is another welcome addition. This way, you keep your attention on the task.

Finally, *Dremel* made a step I wish more toolmakers would copy — compatibility with bits and accessories from other manufacturers. The *Fortiflex* accepts *Foredom* handpieces and bits as well as virtually any other rotary tool's gear. If you do much carving, chances are you'll like this feature, since it means you don't need to give up a comfortable or useful accessory.

With the *Fortiflex*, I was able to carve quickly and with more control than a standard rotary tool. I really felt that the tool was an extension of my hand. You'll find it's a pleasure to use.

choosing workbench
Hold-Down Clamps

▲ These three high-end hold-downs all rely on "canting" (skewing the post at an angle) to hold them in place.

There's no question that bench dogs are a valuable shop accessory. But there are times when they can come up a bit short in your needs for securing workpieces to the top of a workbench. For example, sometimes they don't "lock" a board down quite as well as I want, especially when I'm really working hard at chiseling out a mortise (photo above). Other times, they simply don't have the reach to clamp down a piece right where I want it secured.

HOLD-DOWN CLAMPS. In these situations, I like to turn to hold-down clamps to increase my bench's work-holding capabilities. They fit in your workbench's existing ¾" dog holes, just like standard bench dogs. But these clamps do a lot more when it comes to securing workpieces or tools to the workbench.

Hold-down clamps for the workbench come in a lot of different sizes, styles, and prices. So I decided to take a look at what's out there to help you make some decisions about what you could use for your own shop.

HIGH-END HOLD-DOWNS. The first group I looked at were a couple of high-end hold-downs from *Veritas*, the *Hold-Down* and *Fast-Action Hold-Down* (photos, left). At over $70 apiece, these clamps do cause a bit of sticker shock. But once I opened the boxes and started working with these clamps, it was tough to argue with their ease of use, capacity, and clamping pressure.

To prevent movement, both clamps rely on a "canting" action. This means that when the clamp jaw is tightened, the post skews at a slight angle and

locks into the bench dog hole. Both of the clamps also feature barbed ridges on the posts to further prevent them from slipping in the holes.

With the standard *Hold-Down* shown in the main photo, you simply turn the knob to tighten the clamp. The *Fast-Action Hold-Down* has a cam lever that you rotate to lock it down. Both clamps feature a 5" throat depth and 8" of height capacity.

HOLDFASTS. A more traditional bench clamp is known as a holdfast. You can see one in action at right. Like the other hold-downs, it relies on a canting action to secure itself in a bench's dog hole. But instead of a knob or cam lever, you simply use a hammer or mallet to secure or release the holdfast. The *Lie-Nielsen Holdfast* shown has a 7¼" height capacity and sells for $50 (refer to page 51). Different holdfasts are available from several other manufacturers, as well.

BETTER BENCH CLAMPING. If you find that bench dogs are not handling all of your workbench clamping needs, then these hold-downs and holdfasts are worth a closer look. Though pricey, they certainly lived up to their billing when it comes to holding parts tightly and providing greater reach. Also, take a look at the box below for some non-canting types of bench clamps. W

▲ To lock down a workpiece using a traditional holdfast, simply give it a firm whack with a hammer or mallet.

▲ Tapping the back of the holdfast releases the pressure on it and allows it to slide free from the bench dog hole.

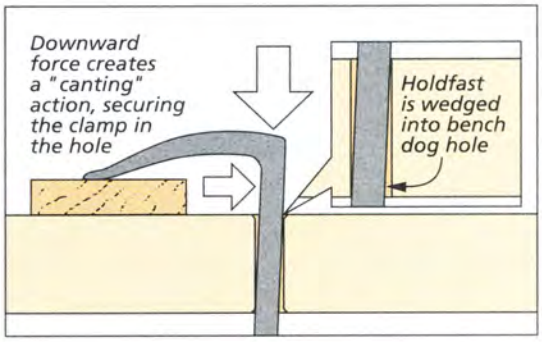

OTHER BENCH CLAMPING OPTIONS

The canting clamps shown on the opposite page aren't your only options. The *Surface Clamp* ($74) at right is also from *Veritas* but works a bit differently. By routing a mortise, you can outfit a worksurface with this handy *Bench Klamp System* ($42) from *Kreg*. Or go the budget route with plastic options from *Veritas* (2 for $12) or *Jorgensen* ($13). They lack the capacity of the other clamps and have to be secured from below, but it's tough to beat the price.

The Veritas Surface Clamp is machined from solid steel and brass

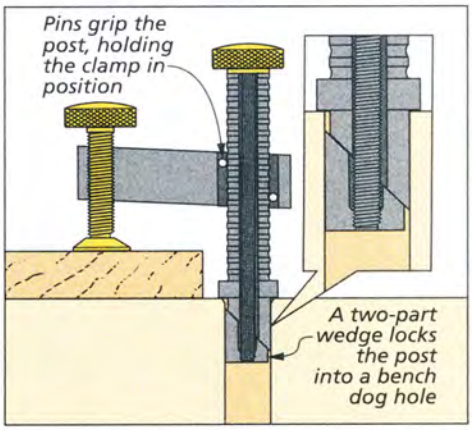

Kreg's Bench Klamp fits a T-track or an included plate that can be mortised into the benchtop

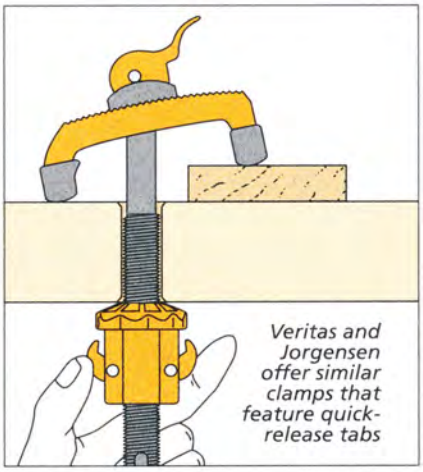

clean-cut Box Joints

Box joints have a prominent place in woodworking. And there's a good reason for that. The interlocking pins and slots provide ample glue surface that virtually guarantees a rock-solid, long-lasting joint. To top it off, box joints showcase the contrasting end and face grain of the wood.

METHOD OF CHOICE. Box joints can be made by any number of different techniques. The table saw with a dado blade is certainly one option for cutting the slots in workpieces over ½"-thick. However, when working with small, thin workpieces, my preferred method is to make box joints at the router table using a straight bit and the simple jig shown above and in the drawings below. The straight bit creates nice, crisp corners in the workpieces.

IT'S ALL IN THE JIG. The key to achieving precise, snug-fitting joints lies in the careful construction and setup of the jig. As shown below, the jig consists of a fixed rear fence attached to a hardboard sled. The sled is sized to slide between the router table fence and a straightedge clamped to the table surface. The rear fence features slots used to attach the front fence. These slots allow easy side-to-side "tweaking" of the spaces in between the cuts.

The front fence is the critical part of the jig. It holds a hardwood key used to index the workpiece after each pass. The key is offset from the router bit by exactly the width of the cut. The fence not only controls the spacing of the pins in the joint, but also backs up the workpiece to prevent tearout during the cuts.

I sized my jig to make ¼" box joints in ¼"-thick material, but it could easily be modified to make different width box joints simply by replacing the front fence and key. The details for building the jig are covered on the next page. Then it's just a matter of following a few simple guidelines to turn out perfect box joints.

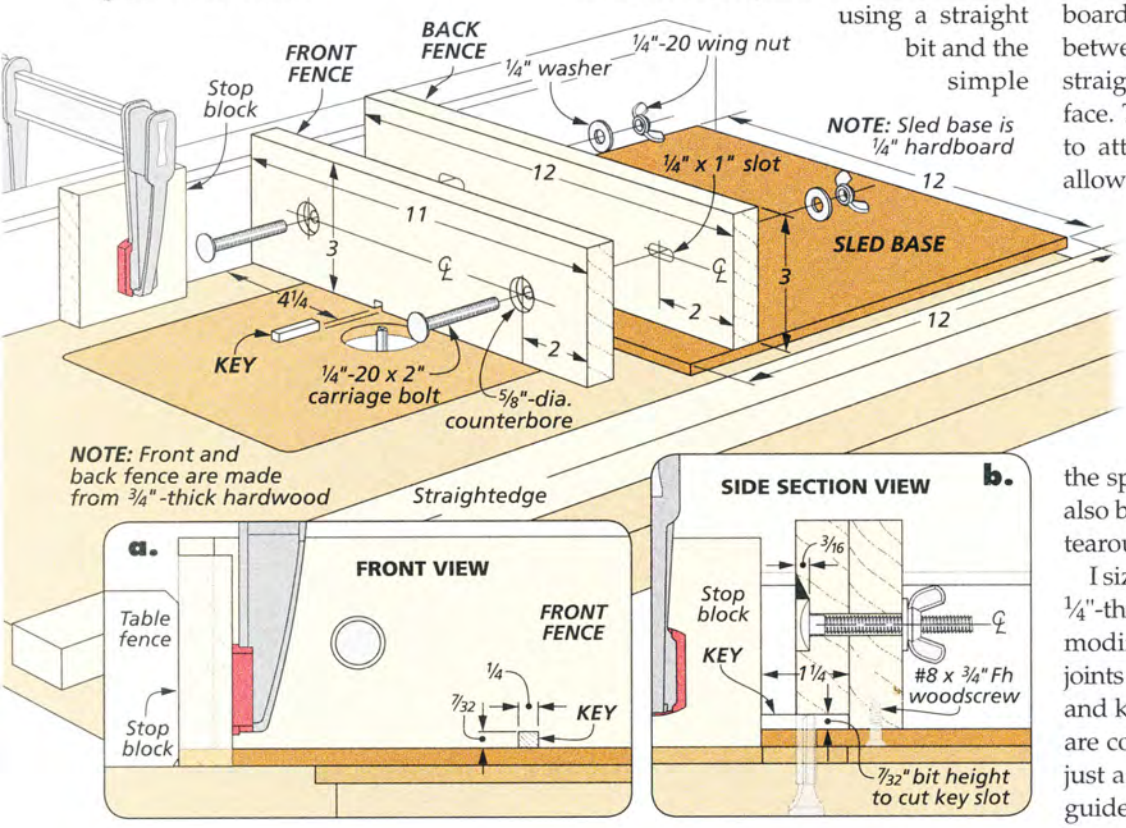

THE SETUP

Start by routing the slots in the back fence and attaching it to the sled base with screws. The drawings at right show the remaining steps to build and set up the jig on the router table. With the counterbored holes in the front fence located and drilled, I installed a ¼" straight bit in the router table to cut the notch that holds the hardwood key. Figure 1 shows how I used a thick backer board to hold the front fence upright and keep it square to the router fence as I passed it through the bit. The key is then glued in place in the notch.

The router bit height should now be set slightly above ¼", measured from the top of the sled base. This allows the pins to run a little long. It's easy to sand them flush after assembly. The next step is to set the distance between the bit and the key (Figure 2). This establishes the width of the pins. Since it's such a critical measurement for the success of the joint, I used a brass setup block to set the initial position of the router fence.

Instead of just sliding the jig along the fence, a straightedge clamped to the table effectively "traps" the jig and keeps it from shifting as the cut is made. Just be sure the jig slides freely along the length of the router table.

TEST RUN. To fine-tune the jig, you'll want to have test pieces on hand that are the same thickness as your final workpieces. A stop block clamped to the router table fence is also a good idea to keep from cutting through the rear fence (main photo, opposite page).

To make a test joint, butt one piece up against the key and cut the first slot. Reposition the piece so the newly cut slot straddles the key and make another pass. Figure 3 shows how to position the first test piece to help start the same process on the mating corner piece.

MAKE ADJUSTMENTS. The drawings below show the most common reasons a box joint doesn't fit together snugly. If the joint is too loose, move the key away from the bit. Likewise, if it's too tight, move the key closer to the bit. This can be done by loosening the wing nuts and sliding the front fence in the desired direction. Just don't go overboard with these adjustments. A tiny tweak is generally all that is needed.

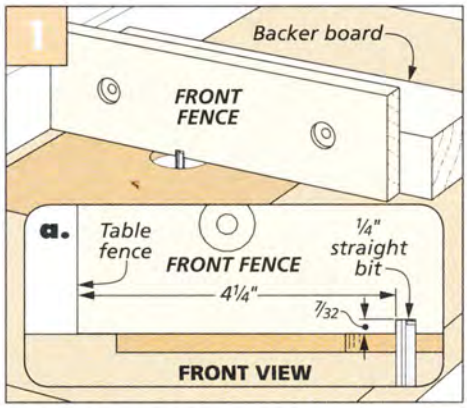

Cutting Key Slot. A thick backer board keeps the workpiece upright and square to the router table fence.

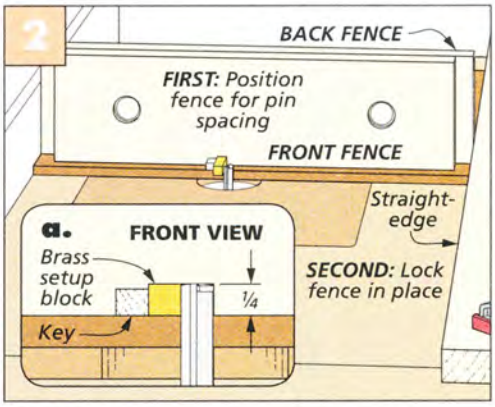

Position Fence. Use a setup block to aid in positioning the router fence. Then clamp the straightedge to the table.

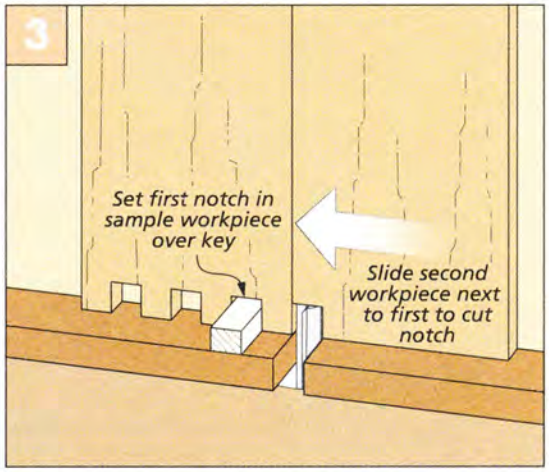

Trial Run. After cutting the slots in one sample piece, use that piece to help locate the starting position for the mating corner workpiece.

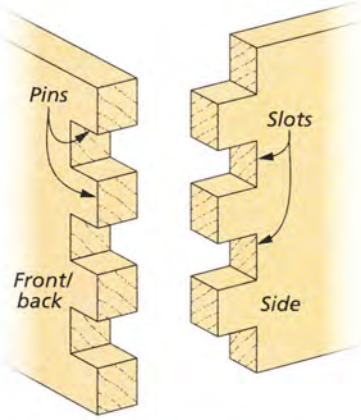

▲ **Box Joint Anatomy.** Slots and pins interlock to form the box joint.

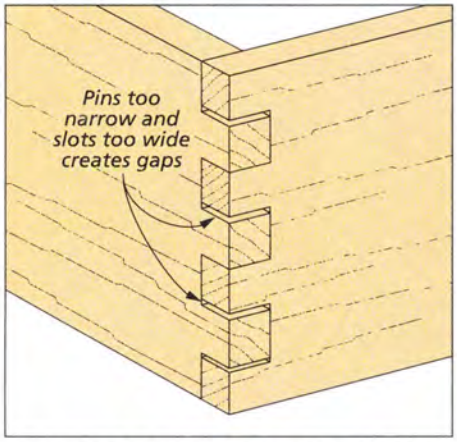

Too Loose. A gap between each pin and slot is caused by a key that's too close to the router bit.

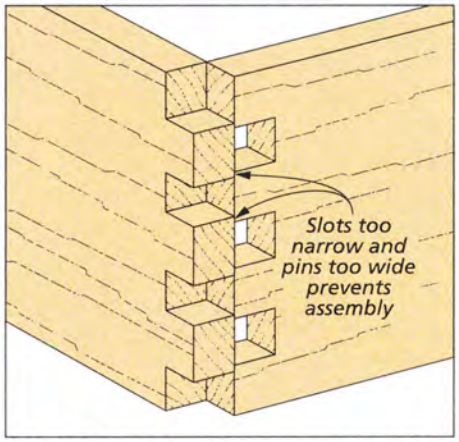

Too Tight. If the pins won't fit in the slots at all, the key is set too far away from the router bit.

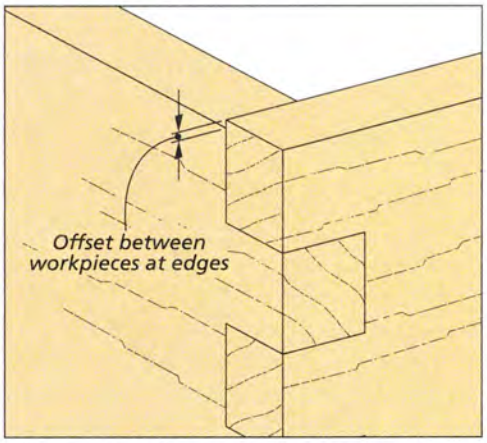

Offset. An offset can be caused by not having one (or both) workpieces fully seated against the key.

BOX JOINT METHOD

With the router table jig tuned up and cutting snug-fitting joints, you're just about ready to start working on your project. But before the sawdust starts flying, there are just a few points to keep in mind while working.

STAY ORGANIZED. Unintentionally cutting parts in the wrong sequence makes a project go downhill quickly. The best way to avoid this is to label every piece. I also letter the matching corners of the project as shown at right.

BE CONSISTENT. It's also important to stay consistent with each pass of the jig over the bit. Even slight changes in the pressure applied can affect the fit of the box joint. Hold the jig with both hands and perform each pass exactly the same.

FULL PINS & SLOTS. Because the eye is naturally drawn to the alternating grain of a box joint, visual accuracy is more important than dimensional accuracy. This simply means that there should be a full pin or full slot at the top and bottom of the workpiece.

This is fairly easy to achieve when working with narrow parts, like the pieces of the picture frame on page 17. As parts become wider than 4", however, it's a good idea to start with extra-wide workpieces and trim them to size after the box joints are cut. With these precautions in mind, it's time to build a box.

TOP & BOTTOM FIRST. Figure 1 shows how the first piece is positioned against the key and fence to make the first pass on the top and bottom workpieces. After the first cut is made, simply position it over the key (Figure 2) and continue down the workpiece. To cut the slots on the other end, flip the workpiece end-for-end (Figure 3), making sure you start with the same edge against the key as before.

SIDES UP NEXT. The technique for cutting the side pieces starts out slightly different. Since the top and bottom began with a full pin on each edge, the sides will start with a slot. To make this cut, you'll use one of the top or bottom pieces as an index.

Figure 4 shows exactly what this setup looks like. Position a top or bottom workpiece over the key and butt a side piece up against it. Hold the pieces tight to the fence and make the cut. The rest of the cuts on the side pieces are made the same as on the top and bottom. Simply hop the workpiece over the key (Figure 5) and continue down the edge until all of the slots are done.

When you flip the side piece to complete the cuts on the other end, be sure to index the workpiece against the same top or bottom piece you used previously to keep the cuts consistent.

BUILD A PROJECT. With this handy jig at your disposal, you're ready to tackle a project like the stylish box joint picture frames on the facing page.

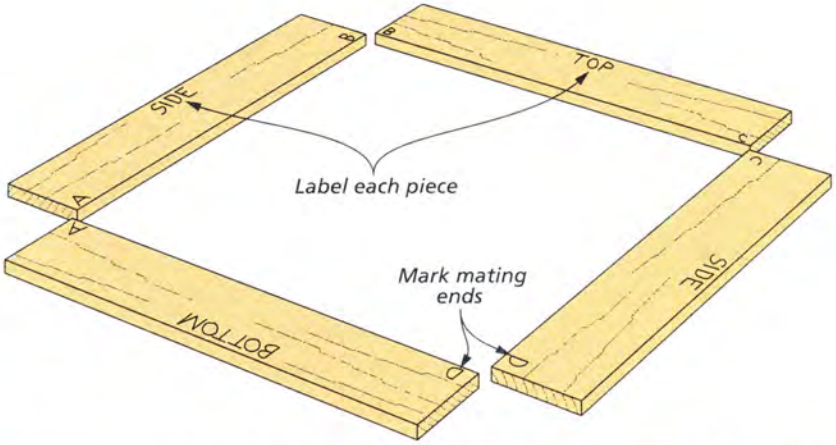

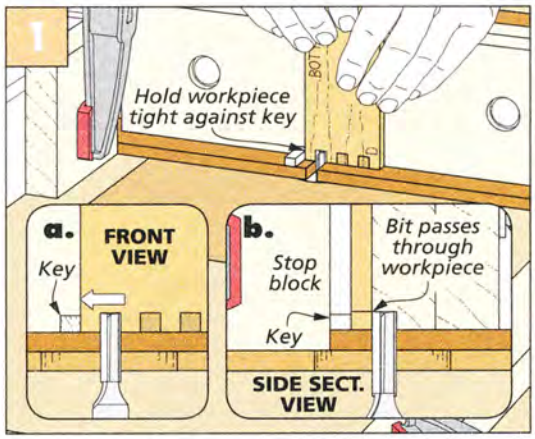

Front & Back. For the first slot in the top (or bottom), hold the workpiece tight against the key and firmly against the fence.

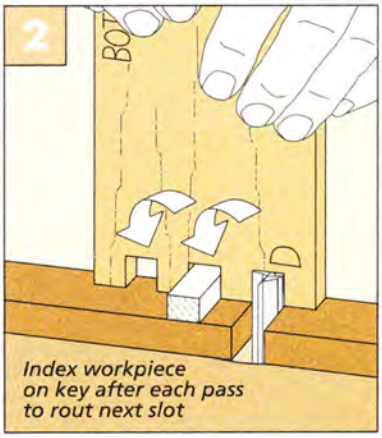

Index. For the next slot, lift the workpiece, slip it over the key, and make another pass.

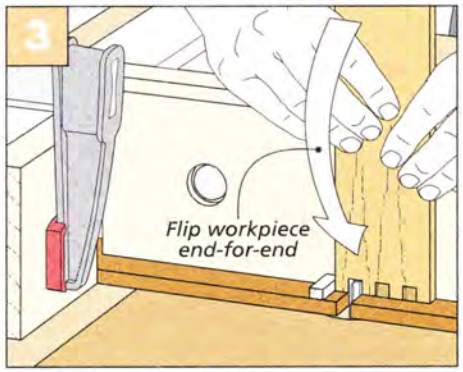

Flip It. The matching slots on the opposite end are cut by flipping the workpiece end-for-end and repeating.

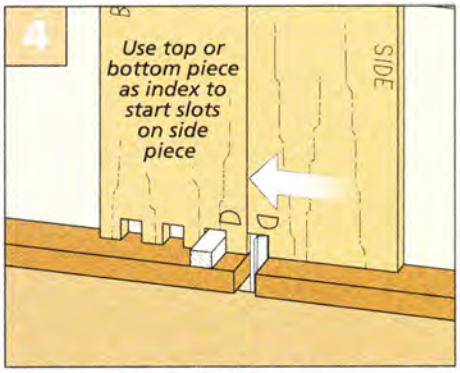

First Cut in the Side Piece. Locate the first slot in the side piece by using the top or bottom as an index.

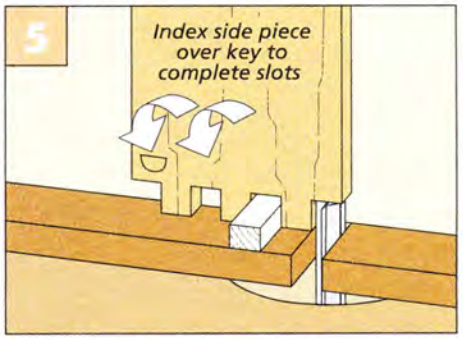

Complete the Sides. The process continues as before: Slip the notch over the key for each subsequent cut.

Weekend Project

Box Joint Picture Frames

Display your favorite photographs elegantly with these shadow-box style picture frames.

Picture frames are the perfect weekend woodworking project. However, there's one element that keeps many woodworkers from giving them a try — mitered corners. It's often difficult to get a tight, gap-free fit.

You won't have that problem with these picture frames. That's because they're constructed using box joints instead of miters. The box joints are easy to make at the router table with a simple jig. And best of all, once the jig is set up, it's a straightforward process to make as many of these picture frames as you need. The photos shown on this page are a small sample of the sizes and arrangements that are possible.

BOX JOINT JIG. The article on page 14 walks you through the process of building and setting up the box joint jig I used to make the parts for these frames. And the materials list on page 19 shows the dimensions for the three different size frames (shown above and at left) made to accommodate common photograph sizes: (4 x 4, 5 x 7, and 8 x 10). The frames are oversized to allow room for a wide mat board.

MATERIAL OPTIONS. Because I intended to stain my picture frames, I chose inexpensive poplar to build them. Also, be sure to select mat board colors that complement the artwork or photos displayed in the frames.

The next two pages cover the step-by-step technique used to construct these fashionable and stylish frames.

▲ Display groupings of artwork in stylish arrays by constructing multiple picture frames. The presentation possibilities are limited only by your imagination.

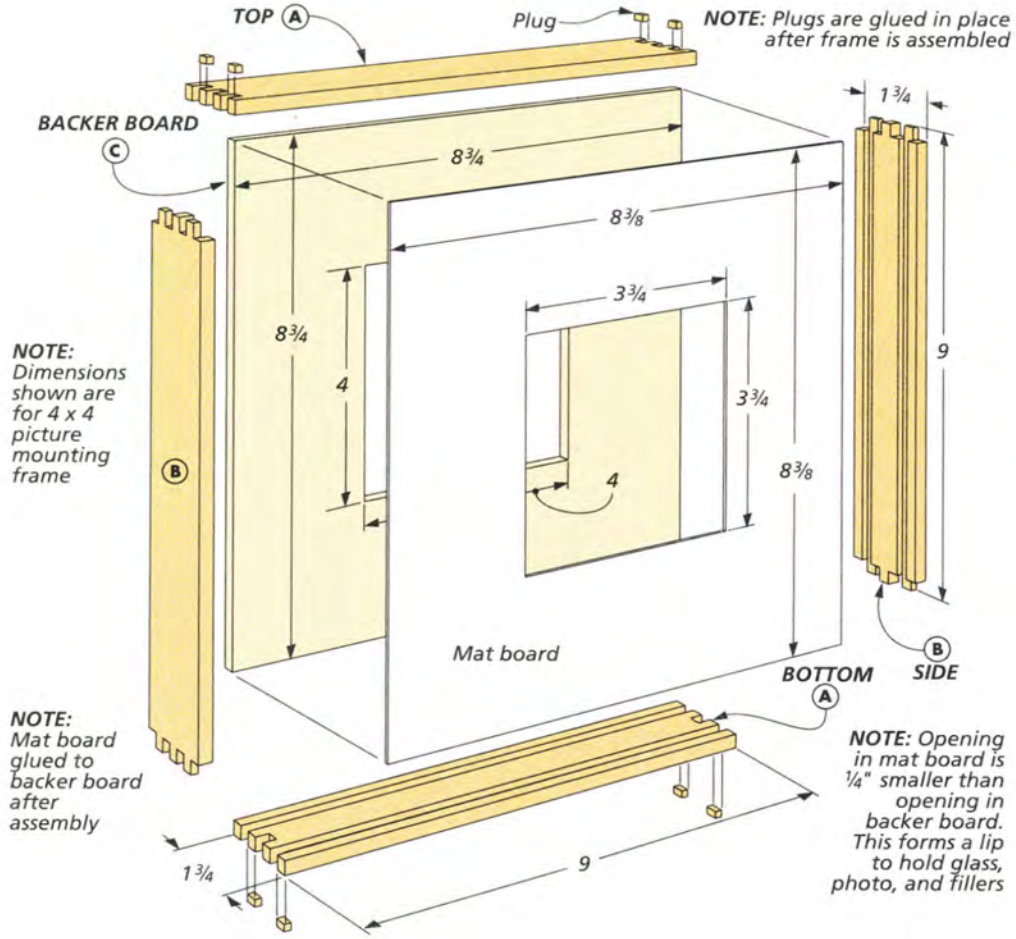

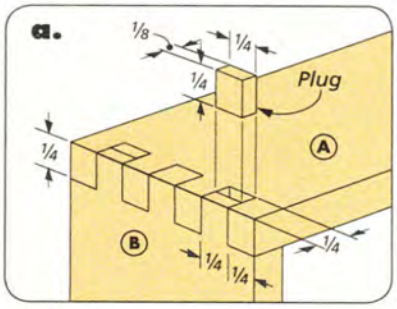

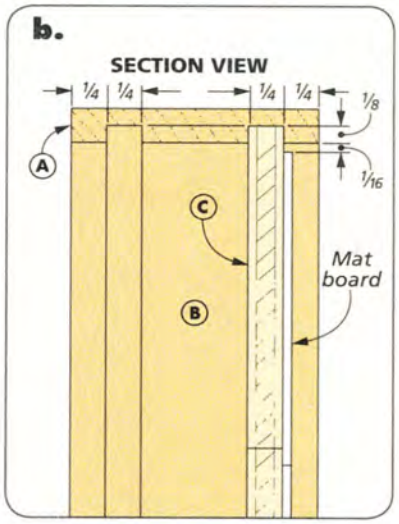

Assembling & Hanging the **PICTURE FRAME**

The dimensions shown above are for the 4 x 4 frame, but the construction method for all of the frame sizes is the same. After cutting the pieces to size, cut the box joints. You should end up with four snug-fitting corner joints.

GROOVES. The backer board is held in the frame with a groove cut on the inside face of each frame piece. Likewise, a second, matching groove fits over a hanging cleat. Since I already had a 1/4" straight bit in my router, I made these grooves at the router table (left box below). Cut the groove for the hanging cleat on all four pieces. This allows the frames to be used in either a portrait or landscape position.

BACKER BOARD. Next up, cut the backer board to size and lay out the opening for the photo (middle, below). A hole drilled in the opening allows you to start the cut with a jig saw. The mat board eventually covers up these cut lines, but the glass and photo has to fit in the opening. A sanding block smoothes the cut edge.

How-To: CUT GROOVE, MAT & GLUE-UP

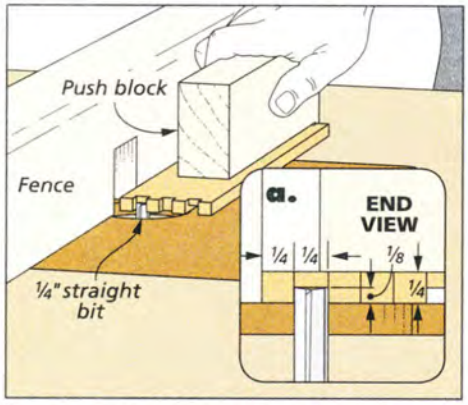

Routing Grooves. Align the router bit with the second slot or pin to cut the 1/4" grooves in the frame pieces.

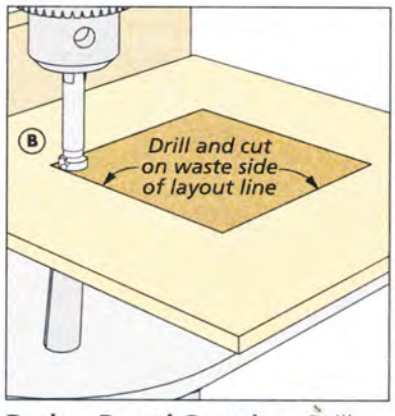

Backer Board Opening. Drill a hole inside the layout line and finish the cut using a jig saw.

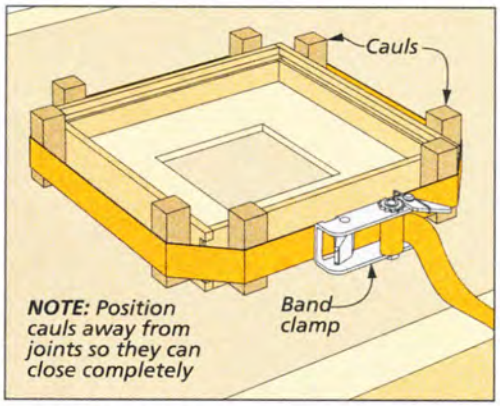

Band Clamp Glueup. Using small clamping cauls with the band clamp provides adequate clamping pressure.

ASSEMBLE. The bottom right box on the opposite page shows the frame pieces with the backer board held in the front groove. I used a couple scraps of wood at each corner to act as cauls. The cauls serve two purposes. First, they keep the band clamp's strap elevated above the corner joint to avoid gluing it to the frame. And second, they focus the pressure precisely where needed to pull the joints together while the glue sets up.

PLUG & SAND. With the frame assembled, you'll notice that the ends of the grooves cut in the inside face are visible on the outside of the box. These are simple to cover up using some small wood plugs (detail 'a,' previous page). With the plugs glued in place, sand them flush with the outside face of the frame.

HANGING CLEAT. The hanging cleat allows the frames to be hung on the wall with no visible hardware. It's nothing more than a strip of wood with a couple holes and a rabbet on the back edge to create a tongue (box below). The tongue is sized to slip into the groove inside the frame (detail 'b,' at right). I chamfered the top edge of the tongue with a sanding block to allow the frame to slip on and off the cleat easily. For the rectangular frames, cut the cleat to fit inside the narrow end of the frame.

MAT BOARD. Now would be a good time to apply a finish to the frames before the mat board is glued to the backer board. Just a quick note about mat board. There is an almost endless selection of styles and colors available. I opted for a quality mat board that is nearly a full 1/16" thick. Even at this thickness, it's easy to cut to size with a sharp utility knife and a metal straightedge. Or if you prefer, most craft stores and several online retailers will custom cut mat board for a small fee.

ADD HARDWARE & ART. All that's left to finish off this frame is to install the turnbuttons to the back of the backer board. These are held in place with screws. Finally, add your art and enough cardboard fillers so that everything is held securely in the recess. W

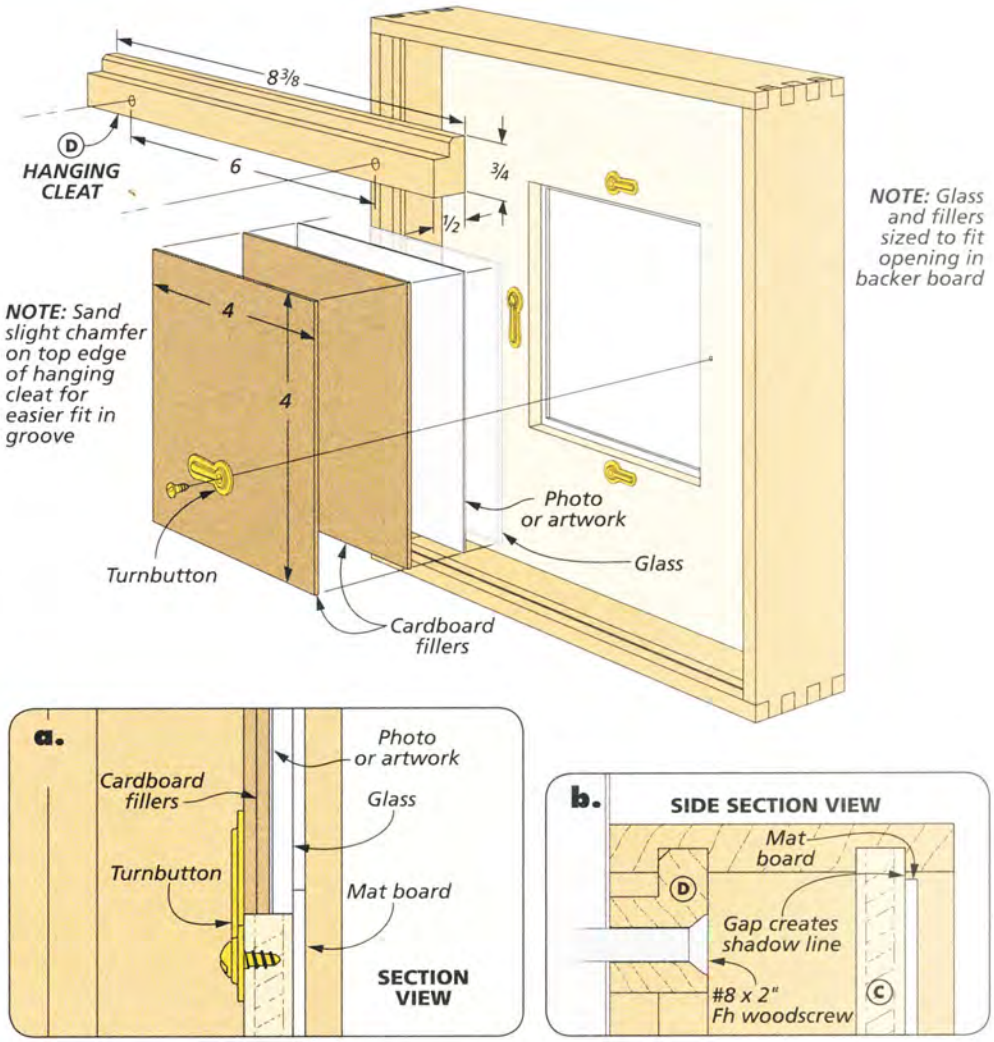

How-To: CUT CLEAT RABBET

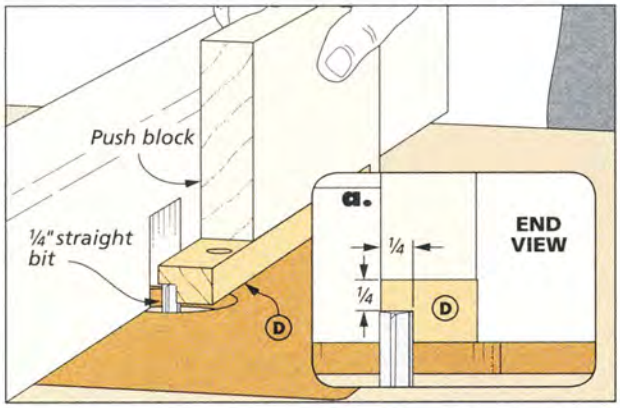

Mounting Cleat Tongue. Take several passes with a straight bit at the router table to sneak up on a slip fit in the groove in the picture frame.

Materials & Supplies (4 x 4 Picture Mounting)

A Top/Bottom (2)	1/4 x 1 3/4 - 9
B Sides (2)	1/4 x 1 3/4 - 9
C Backer Board (1)	1/4 ply. - 8 3/4 x 8 3/4
D Hanging Cleat (1)	3/4 x 1/2 - 8 3/8

- (1) 8 3/8" x 8 3/8" Mat Board
- (4) 7/8" Turnbuttons w/Screws
- 4" x 4" Glass
- (2) #8 x 2" Fh Woodscrews

5 x 7 Picture Mounting:

A Top/Bottom Length - 10
B Side Length - 12
C Backer Board - 9 3/4 x 11 3/4
D Cleat - 3/4 x 1/2 - 9 3/8

- (1) 9 3/8" x 11 3/8" Mat Board
- 5" x 7" Glass

8 x 10 Picture Mounting:

A Top/Bottom Length - 13
B Side Length - 15
C Backer Board - 12 3/4 x 14 3/4
D Cleat - 3/4 x 1/2 - 12 3/8

- (1) 12 3/8" x 14 3/8" Mat Board
- 8" x 10" Glass

modular, 4-square Coffee Table

The versatility of this modular design makes it a valuable addition to the living room whether you use the tables individually or in a group.

I've been wanting to build a coffee table for a long time, but I just couldn't come up with a design that was right for the room. The problem was, I wanted a large table for the living room. But a conventional design would take up the space we often need when entertaining guests.

A modular coffee table was the perfect answer. The configuration in the photo above shows what I mean. Having four individual tables that can come together to form an attractive, larger table gives you plenty of space with storage below. To reclaim the floor space, all you need to do is rearrange the four smaller tables as end tables, or move them out of the way.

The top photo on the facing page shows how the individual, smaller units can be pulled out of the group and used to suit your needs. You can use them as singles or in pairs as required.

The construction of the tables is pretty interesting, as well. Each table has two legs that support the cantilevered top. And while the legs look massive, each one is simply a hollow, hardwood post. A pair of plywood brackets on the inside ties the legs to the frames.

The combination is strong and easy to build. Well, it's easy once you've tuned up your table saw to cut spot-on miters, that is. There are a lot of them in this project. So taking the time to double-check the angles on some scrap before you start will pay big dividends down the road as you tackle the different miters.

Construction Overview / OVERALL DIMENSIONS: 40"W x 40"D x 15¾"H

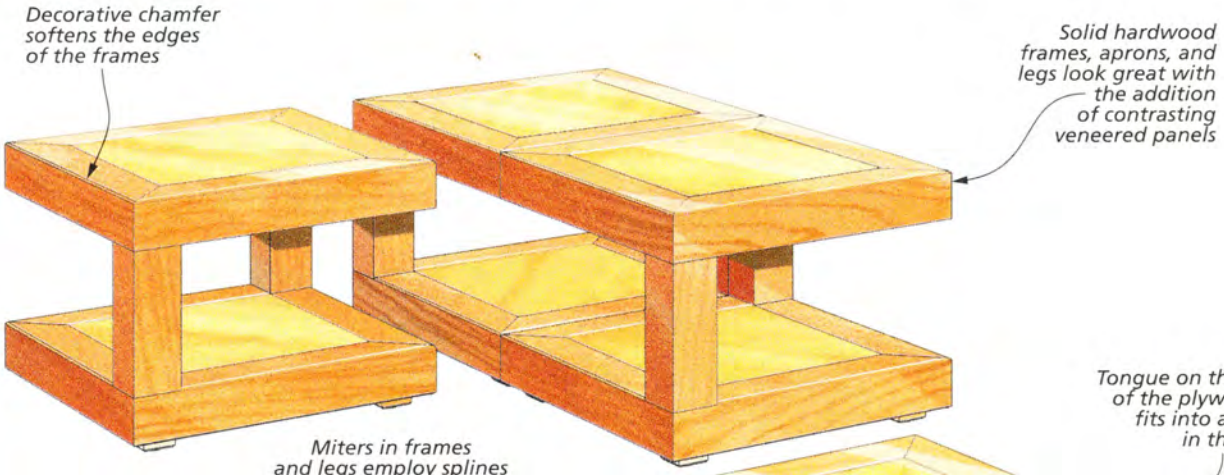

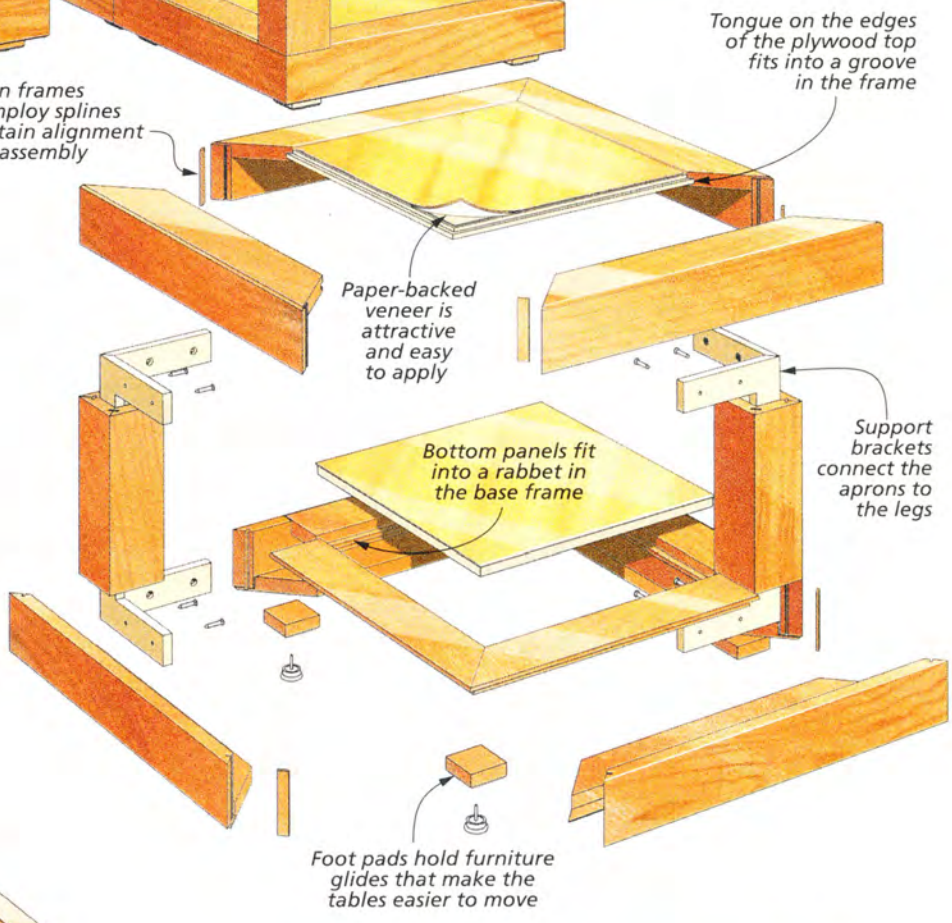

▲ Each table is an independent unit that can be pulled away from the group and used on its own as needed.

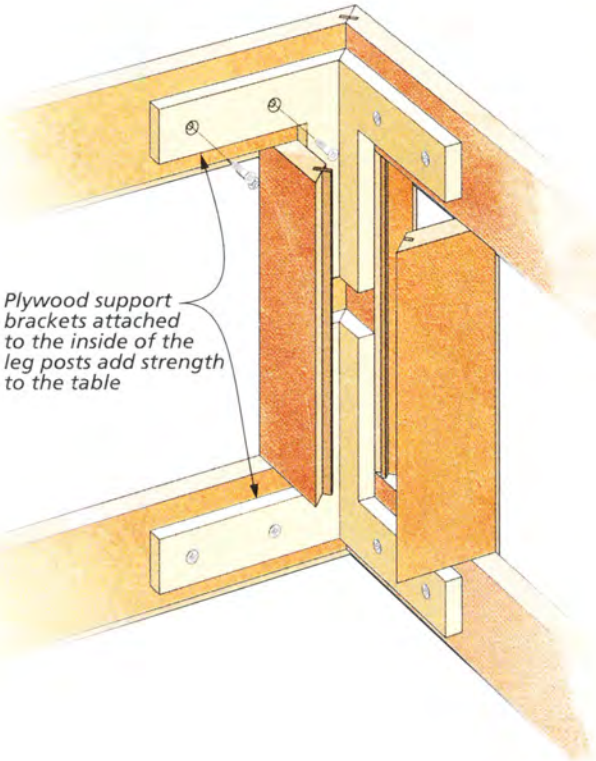

▲ One option for putting the four tables together puts the legs all on the outside edges. This gives you a large, unobstructed space underneath the table for handy storage.

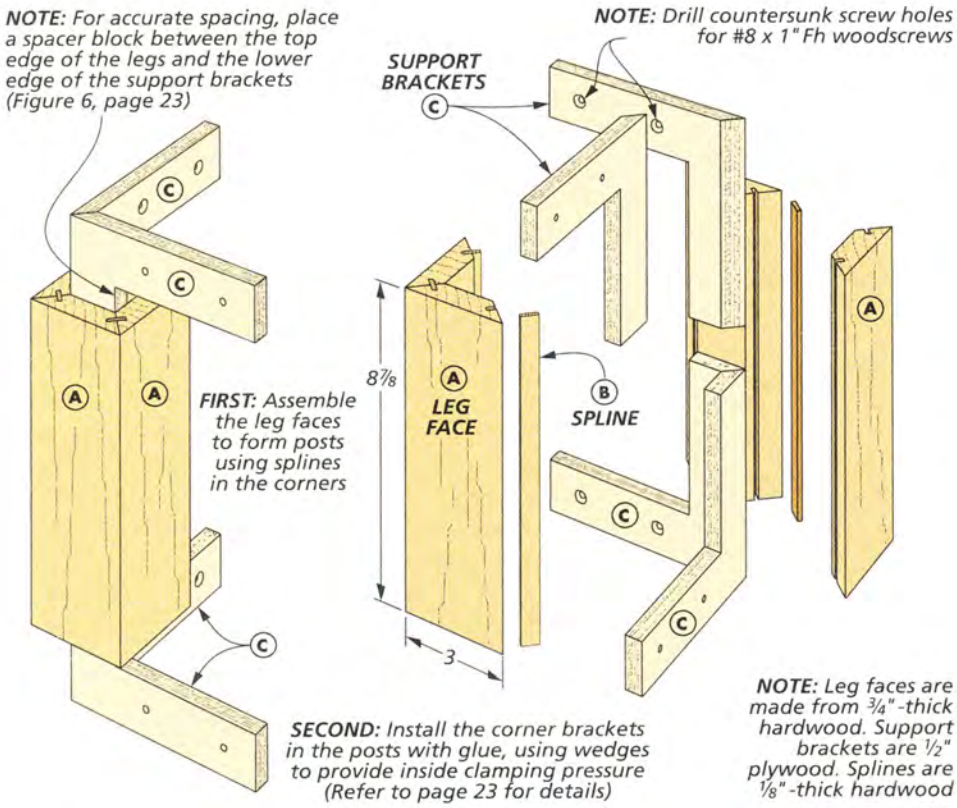

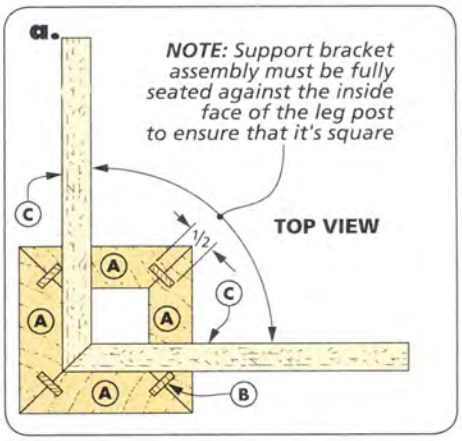

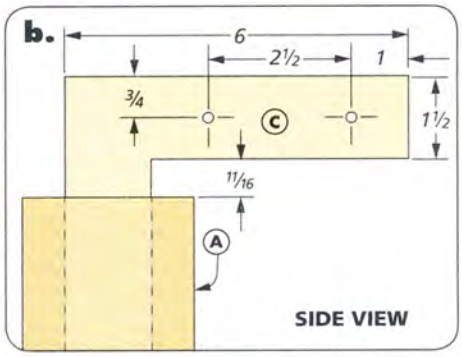

Building the **LEG POSTS & BRACKETS**

The four smaller tables that fit together to form the coffee table are all identical. So you might want to make them all at one time. If you do this, make sure to mark the pieces clearly to void confusion. It's also a good idea to cut a couple extra pieces to use for saw setups.

The first step in building the table is to make the legs. They hold the L-shaped support brackets that attach the legs to the top and bottom aprons.

LEG FACES. The method for making the legs is illustrated on the facing page. Take some time to choose blanks that match well in color and grain. Then cut them to rough length. You can leave the blanks wide so you can bevel the edges. This simply requires tilting the table saw blade to 45° and making the cuts (Figure 1 on the opposite page).

A few years ago, I learned a great trick for getting perfect miters and bevels on the table saw. You start by cutting the bevels on each piece, leaving them still just a bit wide. Then, nudge the fence in just a hair and make a second pass, taking just a skim cut on both edges. The result is a perfect miter.

Why does this work? When your blade encounters the resistance of a workpiece, even the smallest amount of side-to-side deflection can change the angle of the cut. By going back for a

How-To: CUT SPLINES & BRACKETS

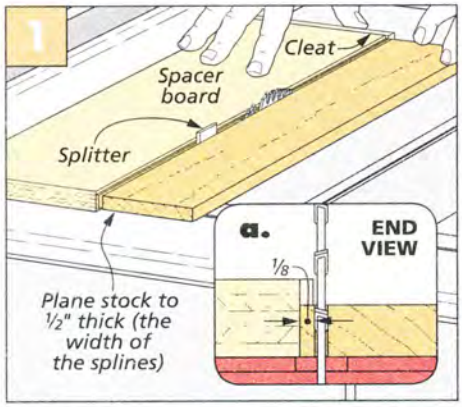

Making Splines. To cut multiple 1/8"-thick splines, place a spacer board against the rip fence, 1/8" from the blade.

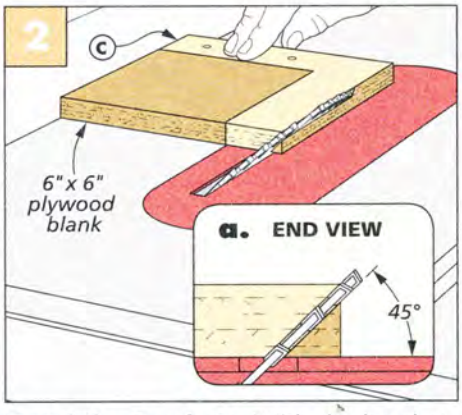

Bevel the Brackets. With the bracket blank still square, bevel one edge of each blank by setting the blade to 45°.

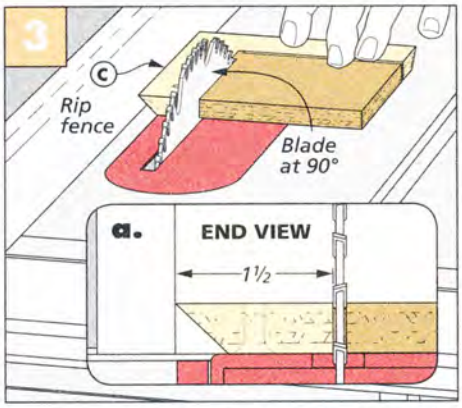

Final Shape. Raise the saw blade to full height and cut close to the inside line. Complete the cut with a hand saw.

skim cut, there's not enough resistance to cause the blade to deflect. The result is spot-on accurate bevels. Try it. You'll see for yourself how this tip will help you get air-tight miter joints.

SLOTS. Next up, you'll cut the slot on each mitered edge for the spline. The splines provide extra strength to the joint, but they're not really necessary for this long-grain to long-grain assembly. I used the splines simply to keep the four faces aligned while I added the clamps.

Once again, a test cut or two to get the blade height and fence position right are in order (Figure 2). The placement of the slot isn't critical. It just needs to be consistent between all the mating pieces. Figure 2a shows the ideal placement.

After cutting the first few, dry assemble one of the legs to check for square and for gaps in the corners. You'll need eight pieces for a single table, and 32 if you build the whole coffee table, so it's worth double-checking each step to minimize the chances for gaps in the assemblies.

SPLINE. At this point, I cut all the splines I needed for the entire project. You can cut the spline pieces by just planing some stock to ½" thick and then ripping the spline strips from the edge. You can see what I mean in Figure 1 at the bottom of the opposite page.

LEG ASSEMBLY. Now you can glue up the four faces of each leg post, as shown in Figure 3 at right. The splines prove their worth here by making this a pretty straightforward task. After the glue dries, use a miter gauge on the table saw to square up the ends and cut the legs to final length (Figure 4).

SUPPORT BRACKETS. Next up are the plywood brackets. Start by cutting some ½" plywood into 6" x 6" squares and bevel one edge of each (Figure 2 on the opposite page). The bracket pieces are mirror images of each other, so you'll need one right and one left piece. Figure 3 on the opposite page shows how I cut the brackets to final shape at the table saw.

After that, drill countersunk screw holes in the locations shown in detail 'b' on the facing page. I assembled the brackets by using painter's tape to hold the two pieces together at the bevel. Then just add glue and use an assembly square to clamp them together at 90°.

WEDGES. Since clamps won't reach inside the legs, I needed a way to put pressure on the brackets while gluing them in place. I used the oldest trick in the book — wedges. Figure 5 shows a sled for making wedges. Turn to page 29 for the details. You'll need to cut a pair of wedges to glue up each assembly.

Figure 6 shows the glueup. As you can see, I used a scrap to space the bracket assembly accurately and clamps to pull the wedges together. I waxed the wedges thoroughly to make sure they didn't end up glued to the legs.

How-To: BUILD LEG POSTS ASSEMBLIES

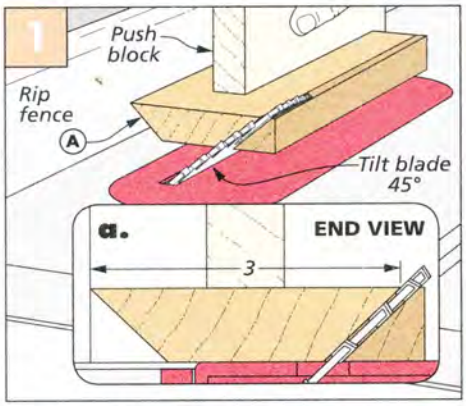

Cut Bevels. After making some test cuts to verify that your blade is at 45°, bevel both edges of the four leg faces.

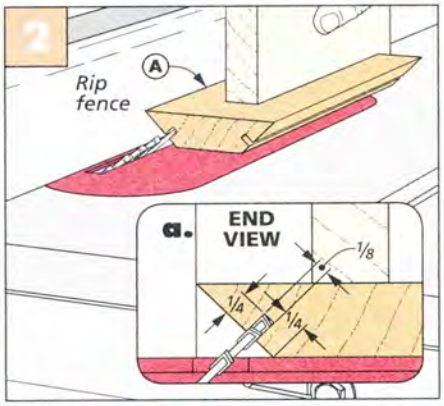

Slot for Spline. The position of the slot must be the same for each leg, so don't move the fence between cuts.

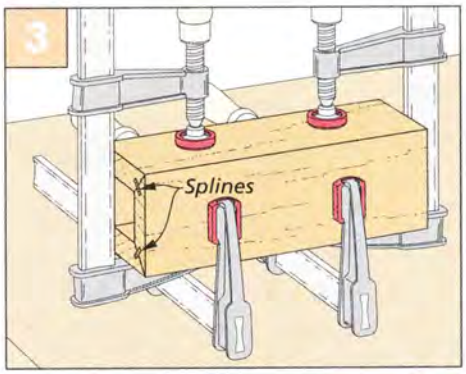

Assembly. The splines make assembly a breeze. You don't need to worry about the pieces shifting in the clamps.

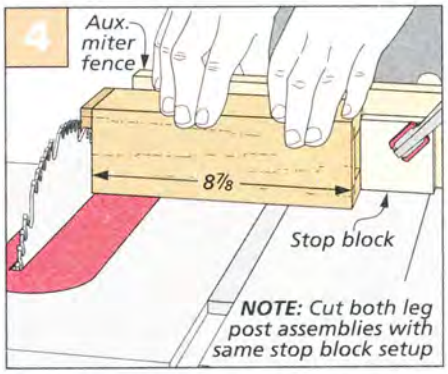

Final Length. After the glue dries, trim one end of each post, then use a stop block to cut them to final length.

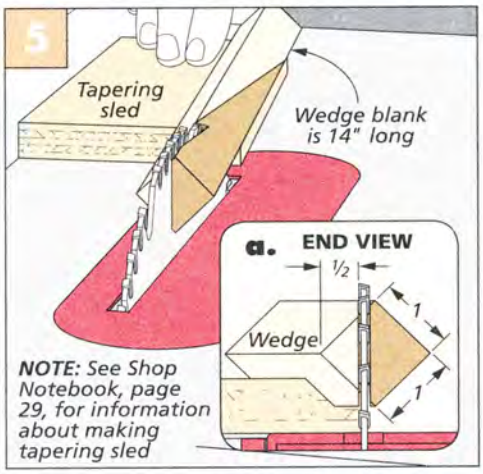

Wedges. Cutting the wedges to use as clamps isn't hard. You just need a tapering sled with a V-groove.

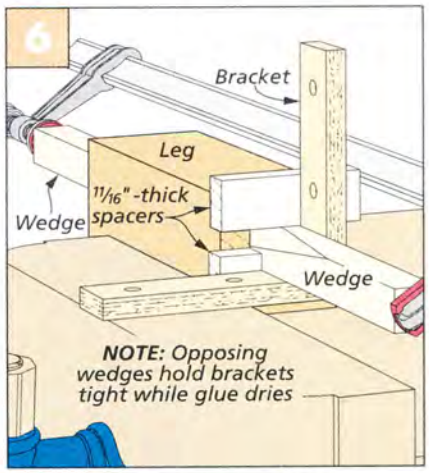

Glueup of Brackets. Using the wedges to clamp the brackets to the inside of the posts works great.

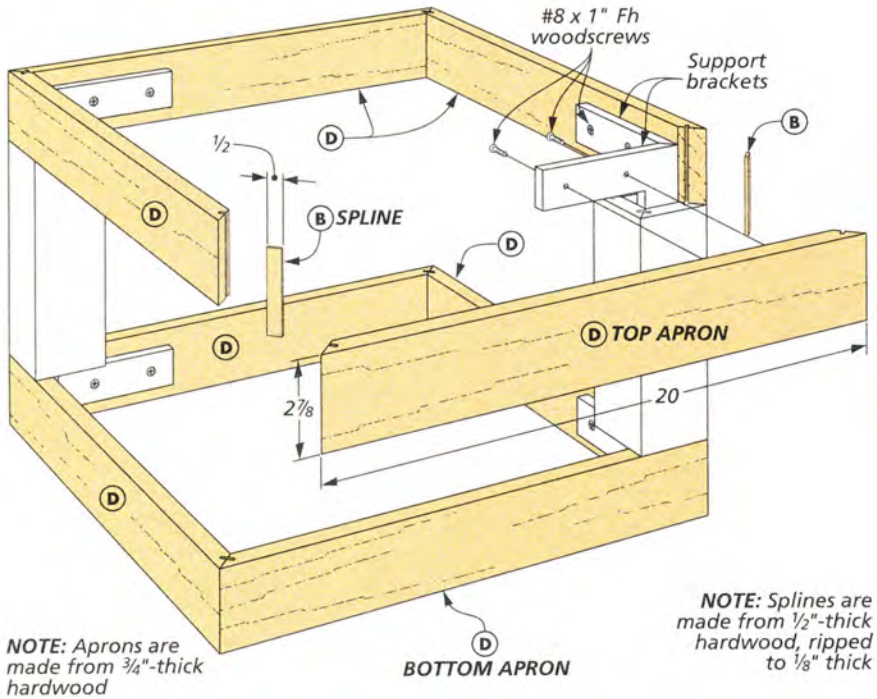

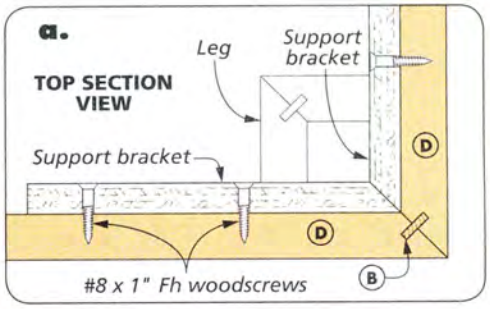

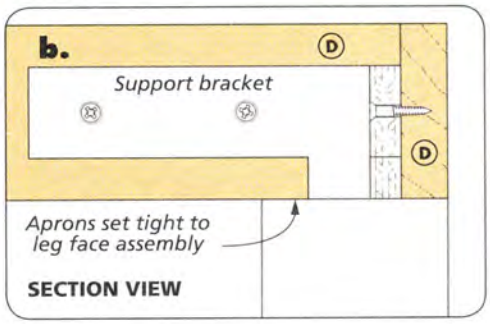

Add the **APRONS & FRAMES**

With the leg post and support bracket assemblies complete, you're ready to move on to adding the hardwood aprons and frames. The mitered aprons attach to the support brackets at the top and bottom with glue and screws. They also have splines in the miters to help add strength to the end grain joint.

TOP & BOTTOM APRONS. The aprons are the most visible part of the tables other than the top, of course. So taking a minute or two to select some attractive stock for them is a good idea. After ripping it all to width, you can set up the table saw for cutting more miters. The box below shows the steps for cutting them. After mitering one end, install a stop block and miter the other end (Figure 1). The result should be dead-on accurate. Then use the miter gauge to cut the slots for splines, as shown in Figure 2.

Dry assemble the aprons and test the fit over the arms of the brackets. Taking the time to test the fit with a band clamp is an important step in achieving gap-free miters. Once you're satisfied with the fit, glue up the aprons using the splines for alignment. After the glue dries, attach each apron assembly to the bracket arms with glue and screws. The photo below shows what each corner should look like when you're done.

BASE FRAMES. I need to point out that there are two slightly different frames on the base of the table — an upper and a lower. The upper base frame has a shallow rabbet that holds the panel you'll add later. And both frames are rabbeted on the outside edge to fit inside the bottom apron. I started with the lower base frame.

LOWER BASE FRAME. Once again, begin by ripping the frame pieces to final width,

How-To: MAKE THE APRONS

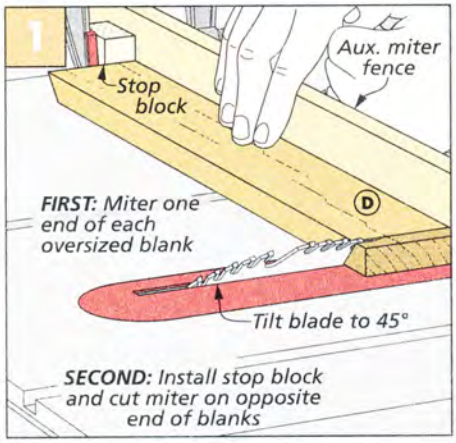

Miters. With an auxiliary fence on the miter gauge, miter one end of the aprons, then miter them to final length.

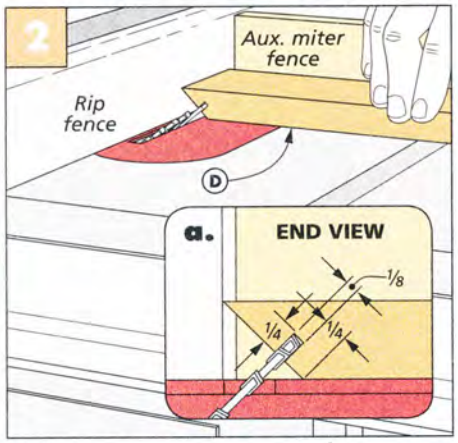

Spline Slots. With a similar setup to the one you used on the leg posts, cut the 45° slots for splines in the apron pieces.

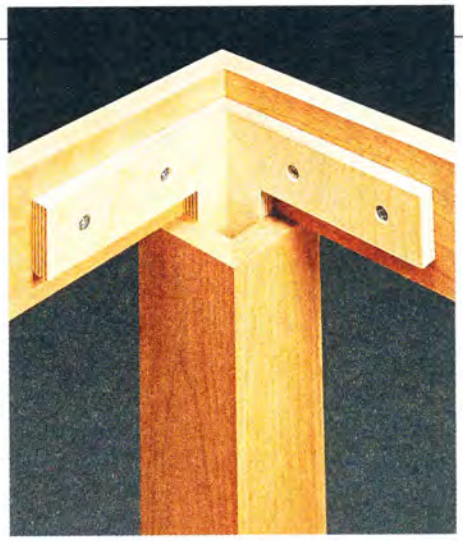

▲ The apron assemblies are attached to the upper and lower support brackets with glue and screws.

leaving them a bit long so you can cut the miters. Then set up the table saw to cut rabbets. The drawing at right shows how the rabbets form recesses for the veneered panels.

Figure 1 in the box below illustrates an easy way to cut consistent rabbets. All you need to do is install a dado blade set to full width and then attach an auxiliary rip fence on your saw. With the fence installed, raise the blade and cut into the auxiliary fence. This way, you can adjust the fence and accurately set the width of a rabbet.

Figure 2 shows how I mitered the pieces. As before, use a stop block to cut them to length. Test each piece for a good fit as you cut them. After that, glue up the frame, chamfer the edges, and install it in place inside the apron.

FOOT PADS. To raise the frames off the floor, I added foot pads in each corner of the base. After the glue dries on the frame assembly, you're ready to cut four foot pads and drill centered counterbores for the furniture glides. You can install the pads as shown in detail 'a' at right, but don't install the glides yet. Wait until after the table is finished.

UPPER BASE FRAME. The upper base frame also starts with cutting the rabbets. But for these pieces, you're going to need a rabbet on the outside edges and a narrower one on the inside edges. When they're installed, the frame will fit over the apron on the outside and create a space for the panel on the inside.

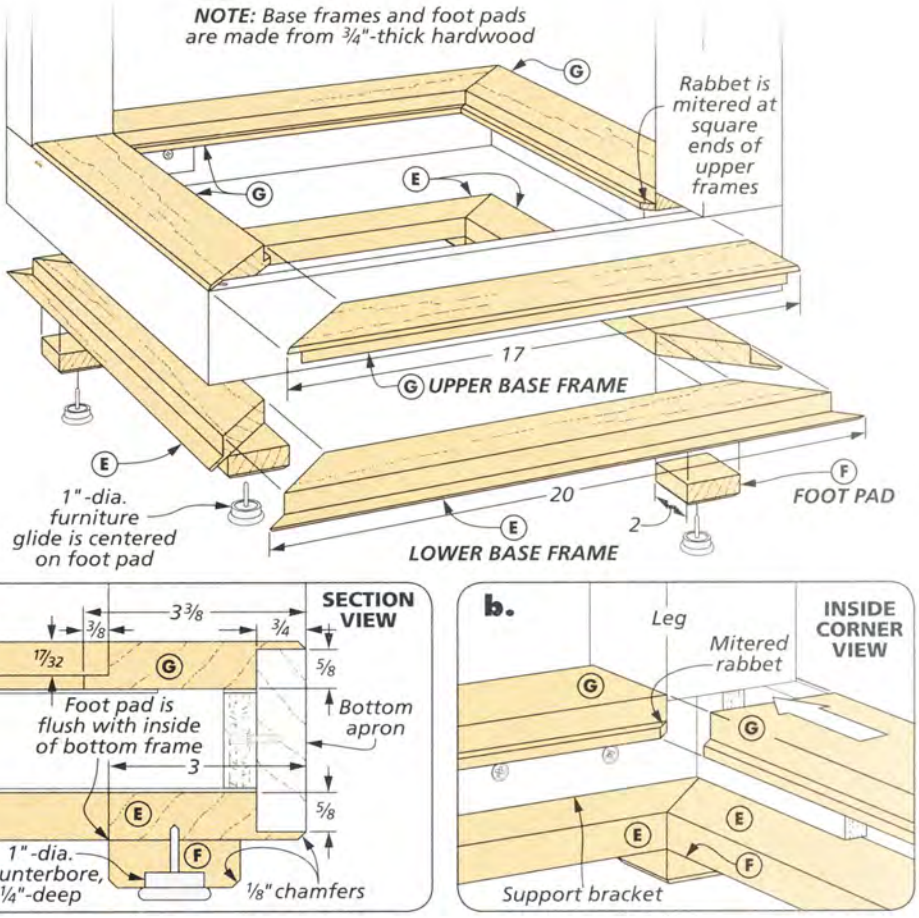

The upper frame pieces are mitered on one end and left square on the other. This is done so the frame will fit around the legs, and it requires a bit of finesse. You'll need to sneak up on the final length to avoid gaps in any of the joints.

After cutting the rabbets, I cut the mitered end of each piece, leaving the pieces a hair long. This way, it's easy to sneak up on a perfect fit by cutting the square ends to fit. But before you do that, you'll need to miter the inside corner of the rabbeted edge as shown in Figure 3 below. Detail 'b' above shows the fit.

Now cut the square ends of the pieces and test the fit. Check for seamless miters on one end and a tight fit against the leg on the other as you glue them up.

How-To: CUT & INSTALL FRAME SIDES

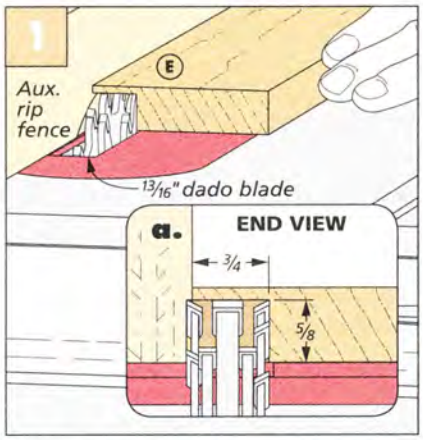

Rabbets. With a ¾" dado blade buried in an auxiliary fence, cut the rabbets on the frame blanks.

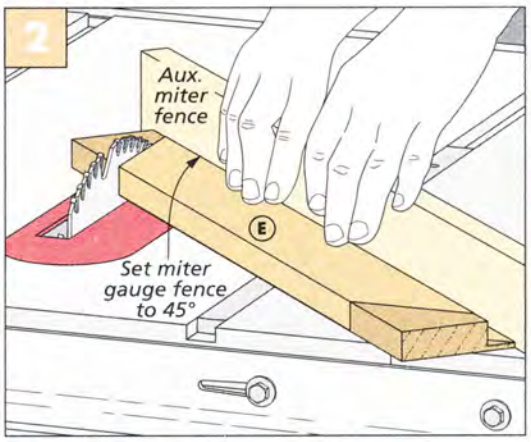

Miters. With the rabbets cut, miter the ends of the lower frames. Miter only one end of the upper frames and leave the other square.

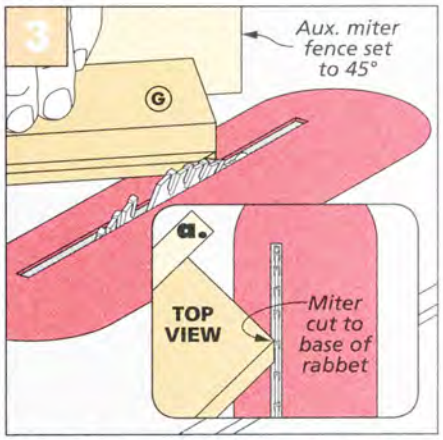

Miter the Rabbets. Miter the inside edges of the rabbets on the upper frames so they fit when assembled.

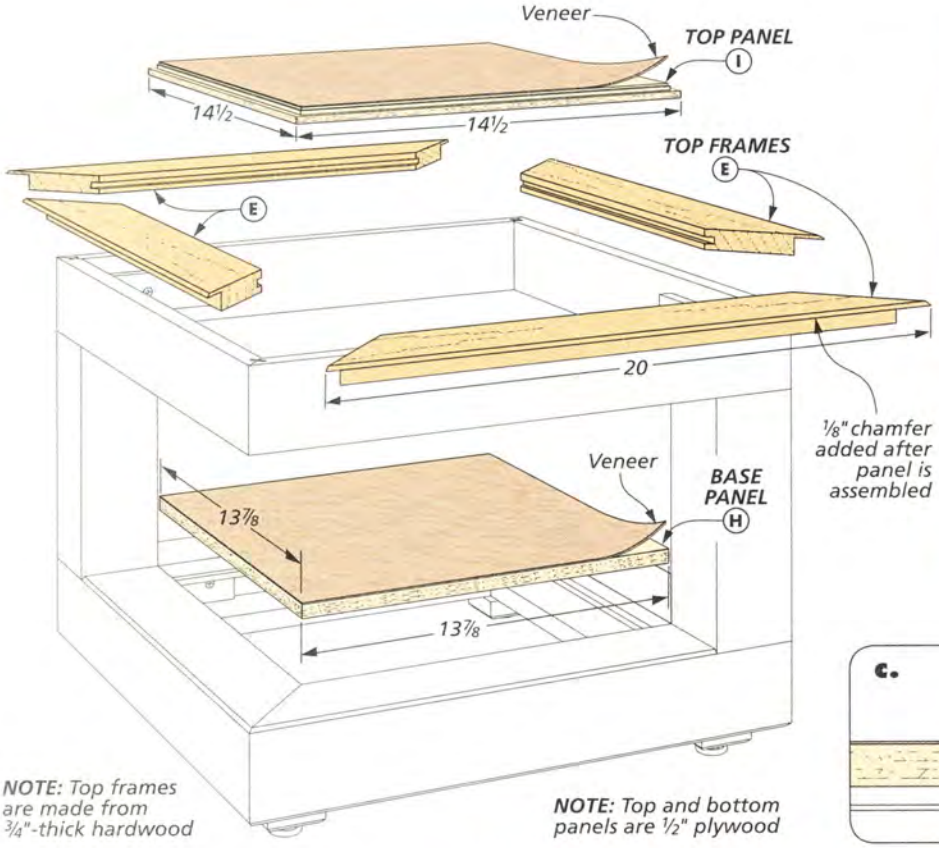

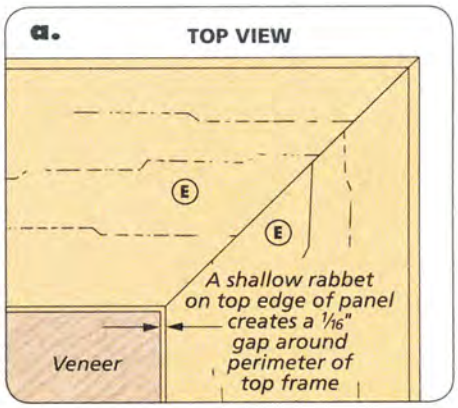

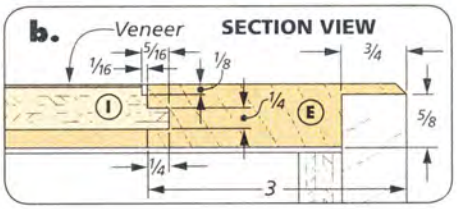

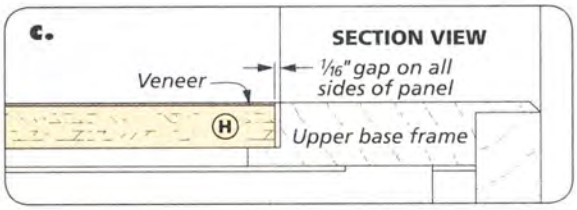

Completing the COFFEE TABLE

With the aprons and base frames installed, the table is nearly done. All that remains is to install the veneered base panel, then make the top frame and panel assembly. After that, you can apply the finish and install the glides.

BASE PANEL. Veneered plywood panels fit in both the top and base frames. The lower panel just drops into the upper base frame you made earlier. The panel for the top fits inside the top frame with a tongue and groove joint. You'll need to wait until you've built the top frame for that one, but you can make and install the base panel now.

The plywood panels are decorated with an eye-popping figured veneer. I chose an exotic, curly anigre veneer to contrast with the cherry frames. Note also the orientation of the veneer. I kept each piece running diagonally in the frame. It produces a nice effect if you make all four tables and slide them together.

PAPER-BACKED VENEER. I used a paper-backed veneer for the tables. It's a lot easier to work with than raw veneer because you don't have to worry about it splitting or cracking while you're working with it. Another big advantage is that you can use contact cement to glue it to the substrate.

Measure the opening in the base to find the exact size for the panel. You're looking for a 1/16" gap all around. Then you can cut your veneer, leaving it about 1/4" over final size (with the grain running diagonally). After cutting the plywood panel, you're ready to add the veneer.

CONTACT CEMENT. Next, spray the plywood substrate and the paper side of the veneer with contact cement. Let them both dry and then position the veneer on the plywood. Figure 1 at left shows how to use a J-roller to force out air bubbles. Make sure to start your stroke in the center of the panel. Slowly roll the entire surface until any air bubbles trapped under the veneer are gone.

The beauty of contact cement is that you don't need to wait for glue to dry, it's done when you finish with the J-roller.

How-To: APPLY VENEER

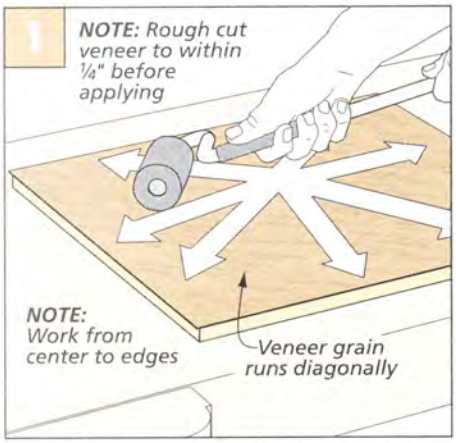

Veneer. Apply a slightly oversized piece of veneer to the panel, then roll out the air bubbles, starting at the center.

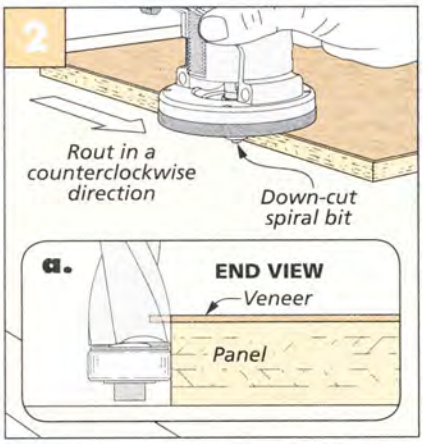

Flush Trimming. With a flush-trim bit in your hand-held router, you'll get a nice, smooth edge on the panel.

As shown in Figure 2 on the opposite page, you can break out your hand-held router and install a spiral down-cut flush-trim bit to rout away the excess veneer from the edges. When you're done, you can install the panel in the base with glue in the rabbeted edge of the base top frame.

You want the panel to be centered in the frame with an even gap all the way around. Playing cards make excellent spacers for the panel. Two or three cards on each of the four sides will help center the panel in the frame. Just be sure to add an equal number in each side.

TOP FRAME & PANEL. For the top, you'll need to start by making another frame. This frame is like the ones you made earlier, but there are a few key differences.

Like the lower base frame, this one has a rabbet around the outside to fit inside the apron. However, in this frame you'll also need a groove on the inside edge to hold a tongue on the top panel. In Figures 1 and 1a at right, you can see the details of the groove and how I cut it at the table saw with a dado blade. Set the four frame pieces aside for now while you make the panel.

With the exception of being a slightly different size, this veneer job is just like before. Cut the panel to final size and then spray it with adhesive. Then do the same to the veneer piece. After trimming the veneer, head over to the table saw.

TONGUE. Install an auxiliary rip fence and cut a rabbet on all four sides, as shown in Figure 2. The rabbet forms a tongue on the panel to fit into the groove on the frame. With the veneered side down, sneak up on a snug-fitting tongue by testing it in the grooves in the frame. Raise the dado blade until you're happy with the fit.

I made a second cut in the veneer side of the panel to form a decorative shadow line around the perimeter. Figure 3 shows how you can lower the bit to cut the rabbet.

CHAMFER. Once I finished assembling the frame, I routed a small chamfer on the edge (Figure 4). After that, install the frame in the top apron with glue.

Once you've added a finish, you can install the furniture glides in the feet. Then clear a spot for your table. With the many possible combinations, you're sure to find one suitable for you. W

How-To: CUT GROOVES, RABBETS & CHAMFER

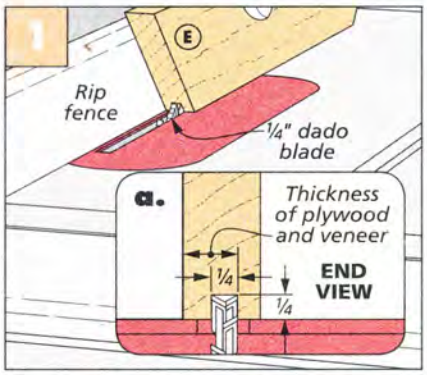

Groove the Frame. Set the rip fence to cut a groove in the frame pieces at the position shown.

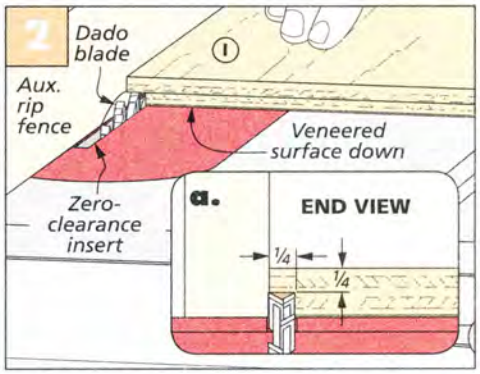

Rabbet the Upper Panel. Start with the bit a little low, then raise it to sneak up on a snug fit in the groove.

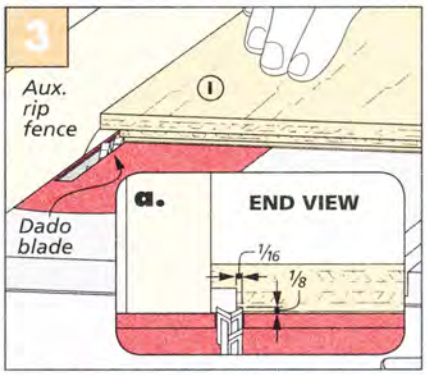

Shallow Rabbet. Lower the dado blades to barely cut into the veneer to create a shadow line in the panel.

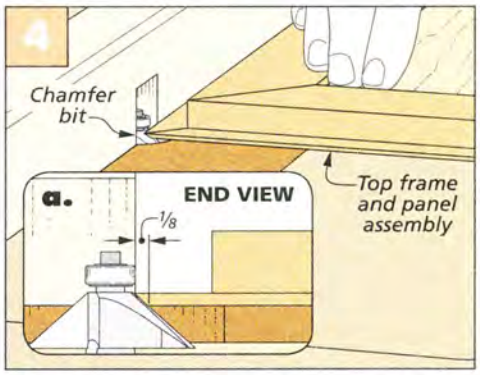

Chamfer Top Frame. Set the router table fence flush with the bearing and raise the bit just a hair to rout the small chamfer.

Materials, Supplies & Cutting Diagram (One table)

A Leg Faces (8)	¾ x 3 x 8⅞	**H** Base Panel (1)	½ ply. - 13⅞ x 13⅞
B Spline	⅛ x ½ - 170 rgh.	**I** Top Panel (1)	½ ply. - 14½ x 14½
C Support Brackets (8)	½ ply. - 6 x 6		
D Top/Bottom Aprons (8)	¾ x 2⅞ - 20	• (16) #8 x 1" Fh Woodscrews	
E Top/Lower Base Frames (8)	¾ x 3 - 20	• (1) 24" x 48" Flexible Veneer Sheet	
F Foot Pads (4)	¾ x 2 - 2	• (4) 1"-dia. Furniture Glides	
G Upper Base Frame (4)	¾ x 3⅜ - 17		

¾" x 6½" - 84" Cherry (3.8 Bd. Ft.)

¾" x 6½" - 84" Cherry (3.8 Bd. Ft.)

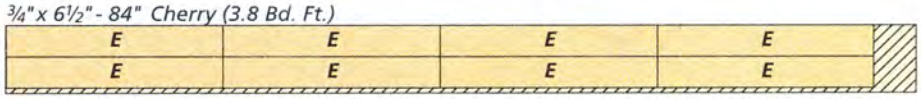

¾" x 6½" - 84" Cherry (3.8 Bd. Ft.)

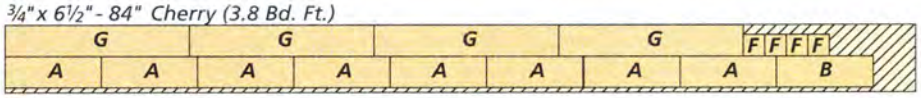

ALSO NEEDED:
One - 24" x 48" sheet ½" Baltic Birch Plywood

NOTE: *Part B planed to ½" thick, then ripped to width*

tips from our shop

Shop Notebook

Large Box Joint Jig

The cabinet on stand (page 30) is assembled with large box joints. These would be difficult to make on a table saw or router table, so I came up with the jig you see below. It works with a pattern bit and a hand-held router to cut precise box joints.

JIG OVERVIEW. The jig consists of two fences and six fingers made from plywood. The two fences sandwich the workpiece, and the fingers guide the bearing of the router bit as you cut the box joints.

BUILDING THE JIG. Making the jig is fairly straightforward. It starts with cutting fences to size as shown in the main drawing below. To make the fingers, I started by gluing two layers of plywood face to face. After cutting an extra-long blank to final width, make a pair of grooves in the underside with a dado blade, as shown in Figure 1. Finally, crosscut the individual fingers at the table saw (Figure 2). Cut out one extra finger to serve as a spacer when assembling the jig.

All that's left is gluing the fingers to the jig. The grooves help align the fingers, and you can use the extra one as a spacer to establish the distance between each finger as you glue them on. Once the jig is assembled, you can see how to use it to rout the box joints on page 32.

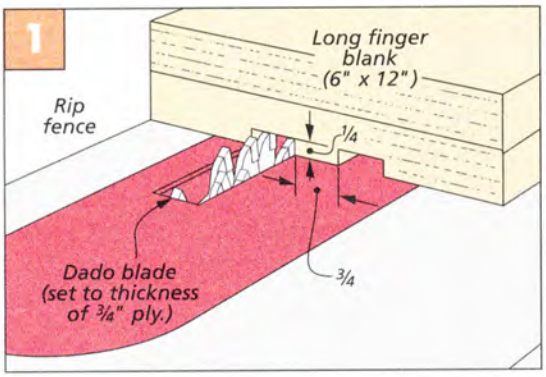

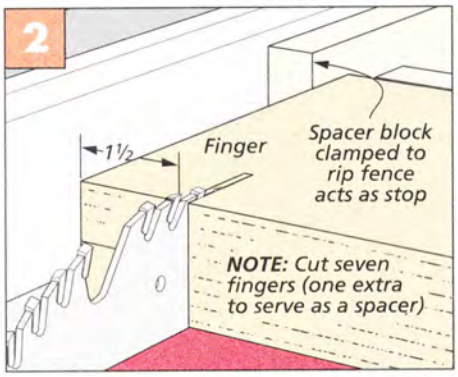

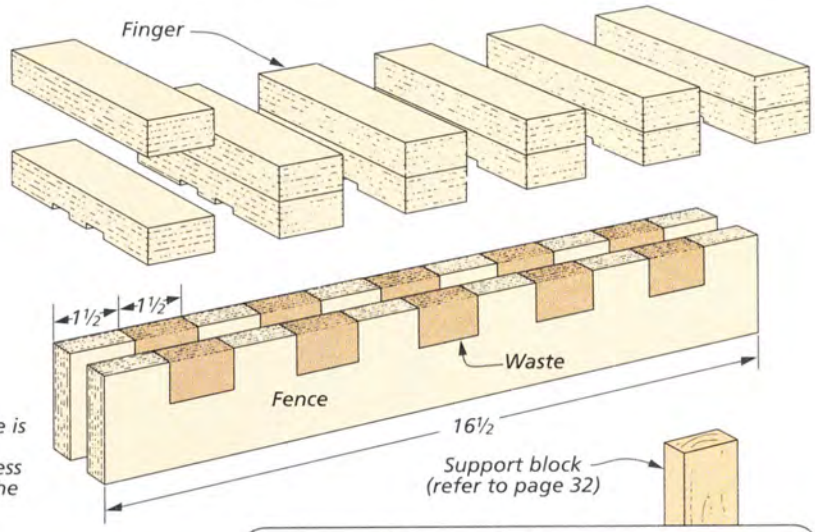

NOTE: Waste is removed during process of routing the box joints

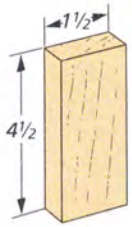

NOTE: Fingers and fences made from 3/4" plywood. Support blocks are 3/4"-thick hardwood

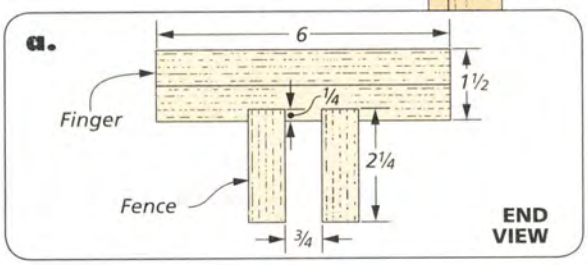

Wedge-Making Sled

The legs of the coffee table (page 20) are made up of four mitered pieces. Inside each leg rests a pair of sturdy plywood brackets that reinforce the table frame.

The only challenge with this assembly was figuring out how to clamp the brackets to the inside faces of the legs. To solve that problem, I used tapered wedges that fit in the leg openings and exert clamping pressure on the brackets (page 23).

SIMPLE SLED. To cut the wedges, I used the sled shown at right. It has a V-groove near one edge to hold the wedge blank at 45° (Figure 1). A slight taper on the other edge will ride against the rip fence of your table saw (Figure 2). After making the sled, you can cut out and use the wedges as shown on page 23.

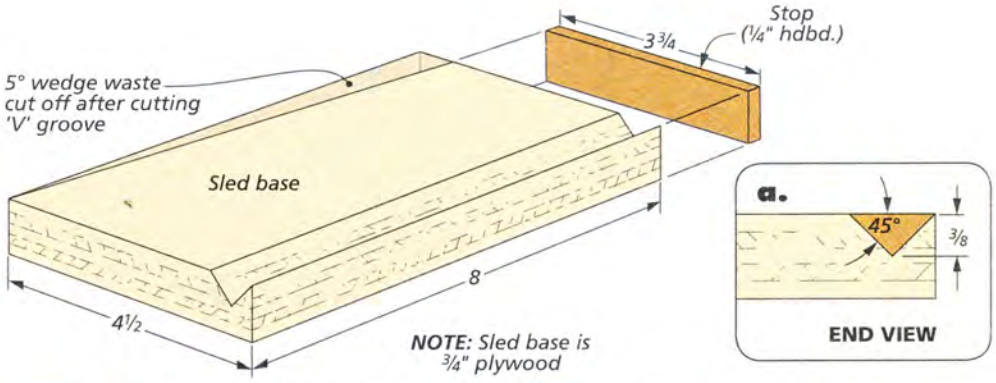

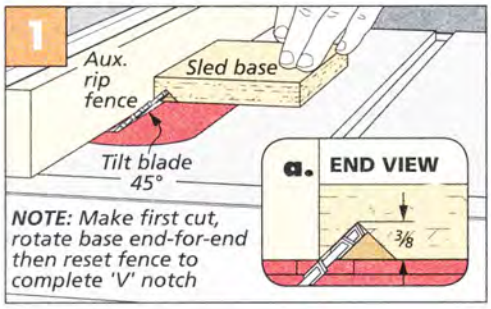

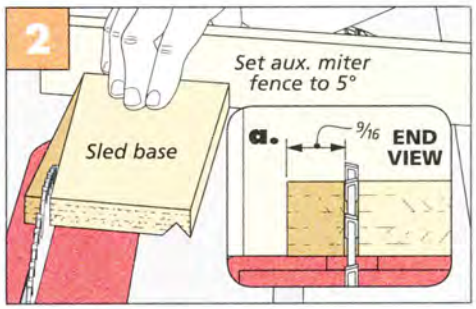

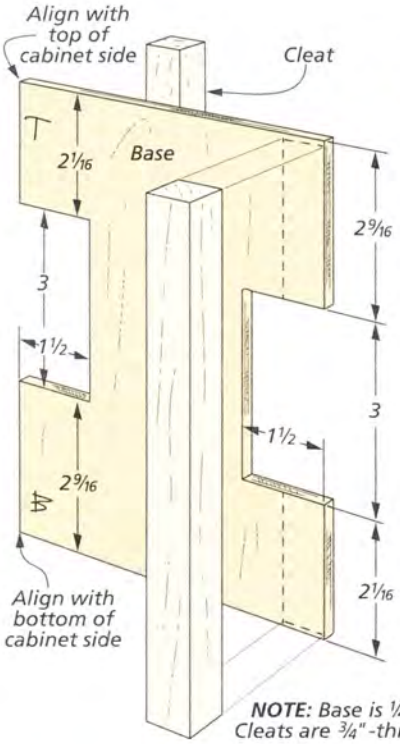

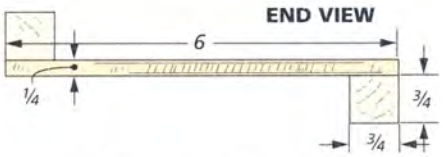

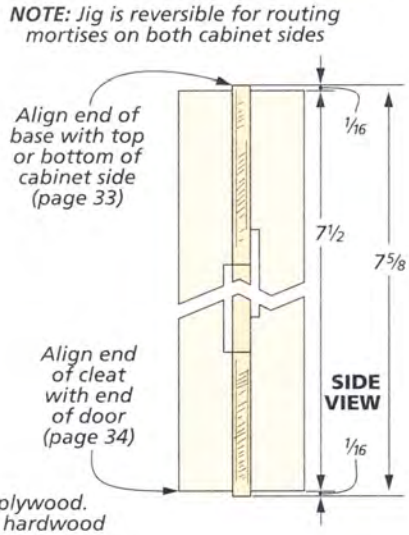

Hinge Mortise Jig

The cabinet on stand (page 30) features eight hinge mortises. Though the mortises are the same size, they're routed in different locations near the top and bottom ends of the cabinet sides and doors.

SIMPLE JIG. Luckily, it's easy to make a jig that can be used to cut all the hinge mortises. It's just a scrap of plywood with notches on the edges and two cleats. As you can see, the notches on each edge are offset. This makes the jig reversible to work on both cabinet sides and doors.

JIG DETAILS. To rout the cabinet sides, you align the corresponding end of the jig base with the top or bottom of the cabinet and rout the mortise as shown on page 33. You'll also note in the Side View at left that the cleats stop short of the ends of the jig base. This is by design, as you line up the cleat with the door end to rout a mortise in the door (refer to page 34). This creates a clearance gap between the door and case.

Simple Drawer Stop

For the cabinet on stand (page 30), I borrowed an old trick I saw on a piece of furniture long ago to prevent the stand's drawer from pulling all the way out.

USE A HINGE. The secret is to install a small hinge on the rail above the drawer opening. As you can see in Figure 1, the hinge pivots to allow the drawer to slide in. But when you pull the drawer out, the back of the drawer strikes the hinge, keeping it in place (Figure 2).

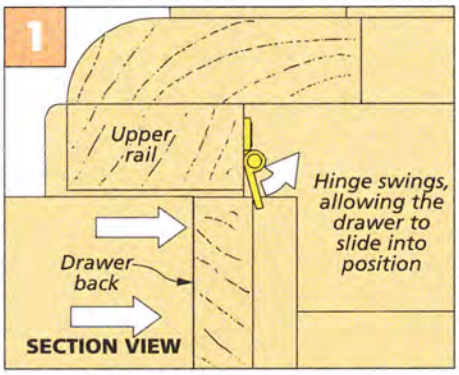

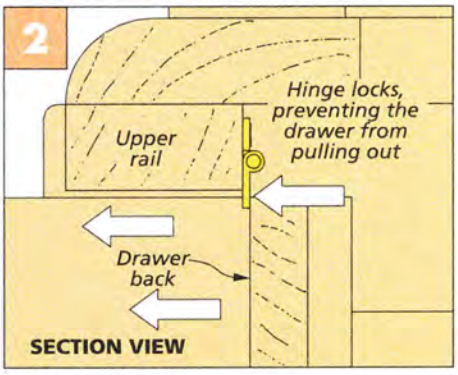

Heirloom Project

traditional Cabinet on Stand

Solid mahogany, figured veneer, flared legs, and many more features make this cabinet a woodworker's dream.

At its essence, a cabinet is a functional piece of furniture. Obviously, you want it to look good, but its primary purpose is to hold a whole lot of stuff.

Every once in awhile, though, it's nice to build a cabinet where the project — not what goes inside it — is the focal point. And that was the basic idea behind the heirloom cabinet on stand shown here.

A DIFFERENT KIND OF CABINET. The cabinet draws upon the work of master furnituremaker James Krenov as inspiration, but it offers a number of unique features that make it more accessible to any woodworker who would like to give it a try. It starts with the solid mahogany hardwood used throughout most of the cabinet and stand. Then, unique sycamore-veneered door and back panels add a highlight of contrast to the darker wood.

DETAILS OF THE DESIGN. The other key features of this project are the interesting techniques used throughout its construction. The cabinet has large box joints at the corners that provide both a rock-solid assembly and a great look. And the stand's flared legs are a perfect band saw skill-builder. All in all, it's a challenging build, but I think you'll find the final result well worth the effort.

Construction Overview / OVERALL DIMENSIONS: 28 3/16"W x 68 1/2"H x 15 7/16"D

▲ The stand's top frame features a large radius that forms a seamless transition between the cabinet and stand.

▲ The stand's front legs flare out in two directions. You'll find the details of the band saw technique on page 37.

▲ The cabinet's unique blend of mahogany and sycamore veneer is sure to look great wherever you display it in your home.

Make the CABINET

I started this project with the cabinet. The case of the cabinet features solid mahogany top, bottom, and sides joined together with large box joints.

The case parts are all fairly wide, so you'll want to glue them up from narrower boards. I spent quite a bit of time up front selecting each board, making sure to get even, consistent color and grain from board to board.

Once I was satisfied with the look, the process of planing the boards to consistent thickness and jointing the edges came next. Then I brought out the glue and clamps to form each of the panels. After the glue had dried, it was time to cut all four of the parts to their final dimensions.

BOX JOINTS. The box joints featured on the case are larger than most. So rather than use a table saw or router table, I built a jig for use with a handheld router and a pattern bit. You can find details for building the jig in Shop Notebook on page 28. The process for cutting the joints is outlined in the left two drawings below.

There are a few details of this process that I'd like to point out. One, it's best to cut the joints with two progressively deeper passes. Also, when cutting the joints on the top and bottom pieces, add support blocks to the openings at the ends of the jig. As you can see below, this prevents tearout on the edges of the panel as you rout.

The first time you use the jig, you'll also remove waste on the fences of the jig as you rout the workpiece. But once the waste is removed, it should be smooth sailing on all the joints.

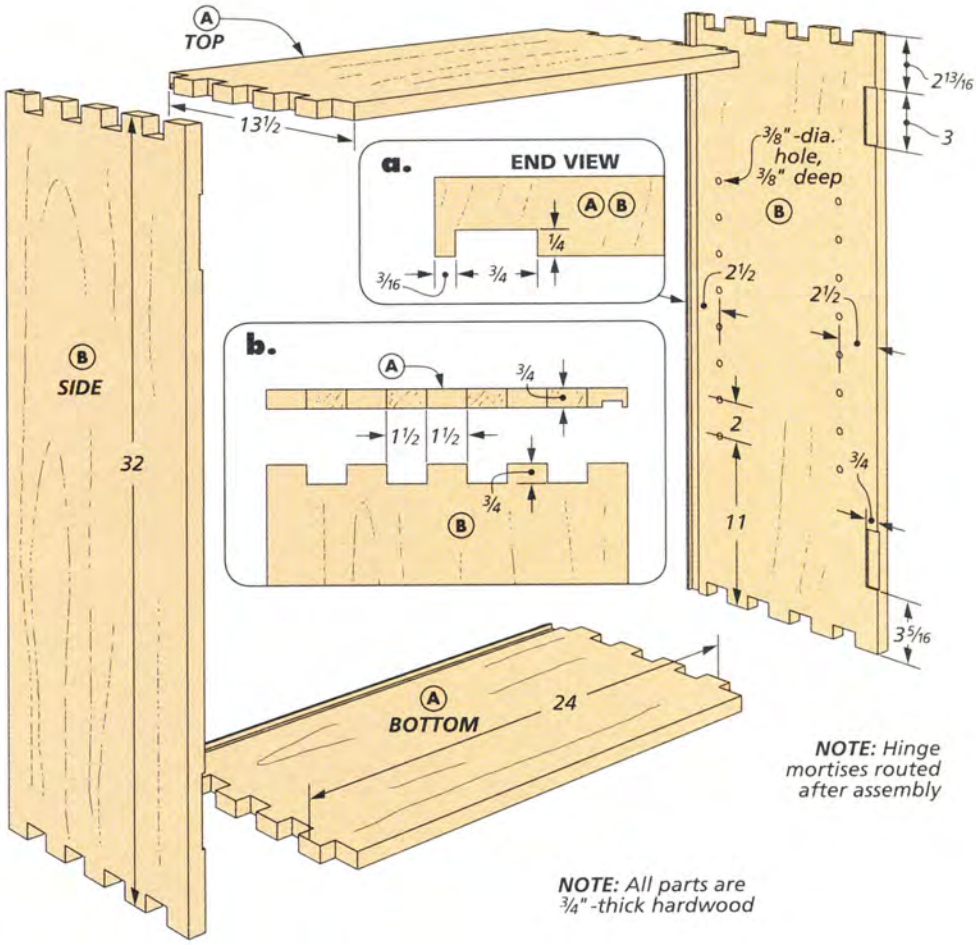

COMPLETE THE CABINET PARTS. There are a few more details to add to the case parts. The first is a groove near the back edge of all the parts to accept the back (lower right drawing). This cut leaves a couple of small openings at the top and bottom of the cabinet, but there's no need to plug these, as they get covered up later on. You'll also want to lay out and drill a

How-To: CABINET JOINERY

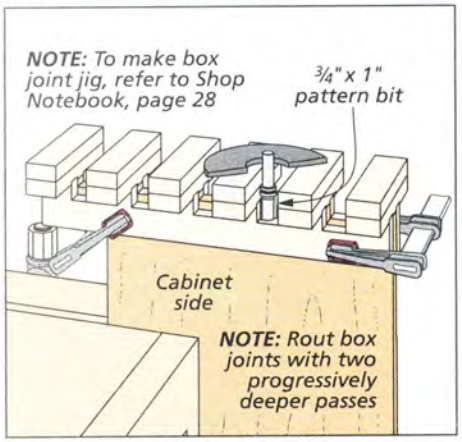

Sides. To cut the box joints on the side pieces, align the end of the jig with the edge of the workpiece.

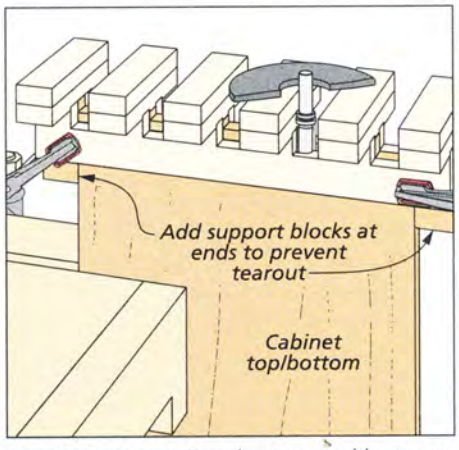

Top & Bottom. For the top and bottom, position the part flush with the first finger and add support blocks.

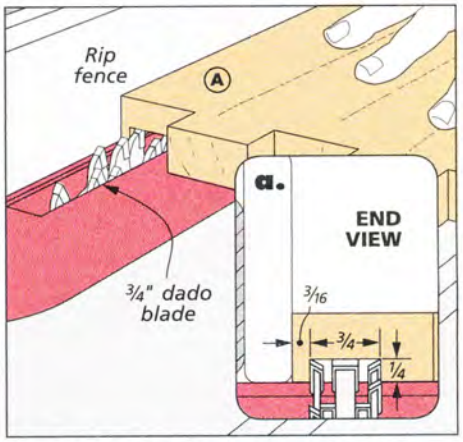

Groove for Back. Set up a dado blade in the table saw and cut a groove in all four case parts for the back.

series of holes in the sides to fit the shelf supports and sleeves.

FRAME & PANEL BACK. To dress up the back of the cabinet, I made this one a frame and panel assembly. The rails and stiles are solid mahogany, while the panels are Baltic birch plywood with veneer on both faces. You can get started by cutting all these parts to size.

VENEER PANELS. The rails and stiles are joined with stub tenon and groove joints. Before cutting these, though, you'll need to apply veneer to the panels. That's because the grooves will be sized to fit the overall thickness of the veneered panels.

Start by cutting each piece of veneer just a bit oversize to fit the faces of the panels. Then use cold press veneer glue to attach it. To hold the veneer in place as the glue sets, sandwich each panel between two MDF panels sized to match the plywood and clamp them in place. When the glue dries, you can trim the veneer flush with the edges.

STUB TENONS & GROOVES. Next up is cutting grooves in the rails and stiles to fit the panels. To do this, I set up a dado blade and made test cuts on a piece the same thickness as the workpieces. First set the rip fence and pass the test piece over it, flipping it end for end to create a centered groove. Check the fit of the veneered panel in the groove, and then adjust the rip fence just a hair. Repeat the process until the panel fits nicely in the groove. Once this setting is established, cut the grooves in all the rails and stiles as shown in the left drawing below. Note that the middle stile of the back has grooves on both edges.

With the grooves all cut, you can turn your attention to the stub tenons on the ends of the stiles. You'll find the details of this cut below. Sneak up on the thickness of the stub tenon until it fits right.

FINAL ASSEMBLY. You're now ready to assemble the case. Glue up the back panel first. Once that dries, you can glue up the entire cabinet with the back in place, using a dead-blow mallet to coax the box joints together around it.

Finally, I used a jig to rout a pair of hinge mortises in each side, as shown in the right drawing below.

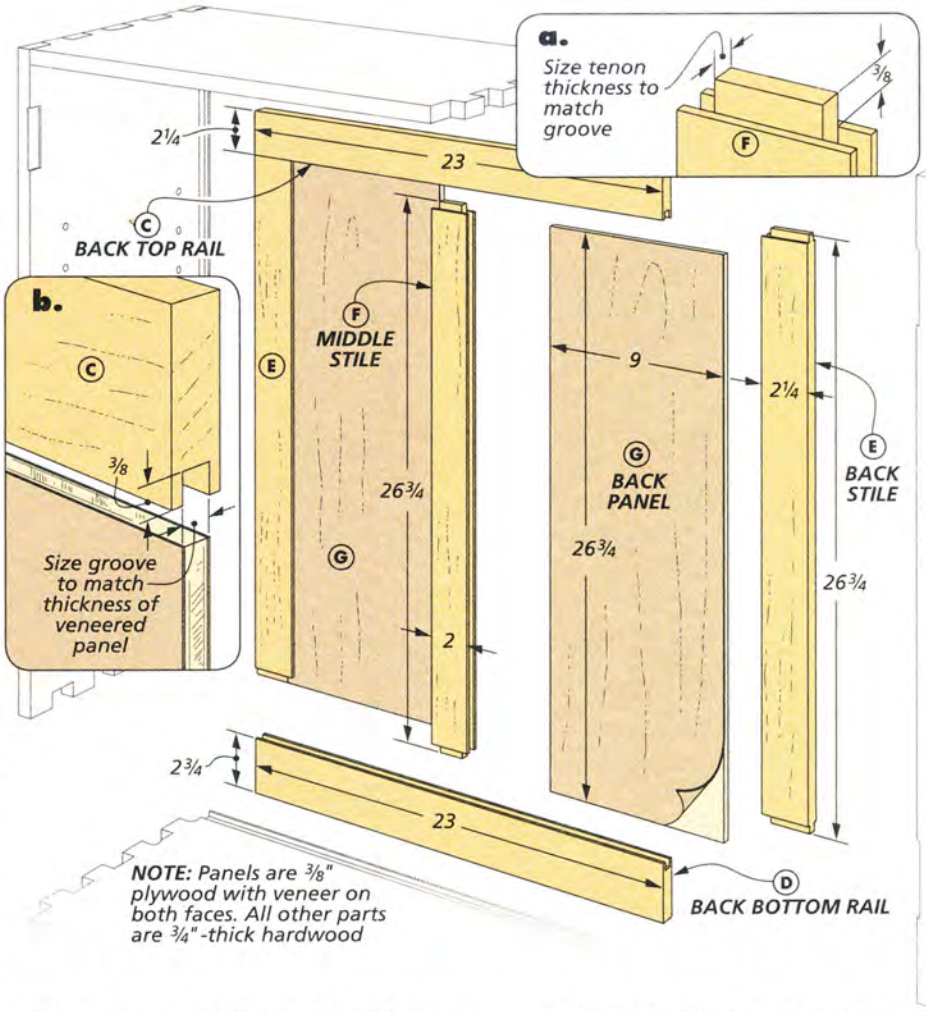

How-To: GROOVES, STUB TENONS & HINGES

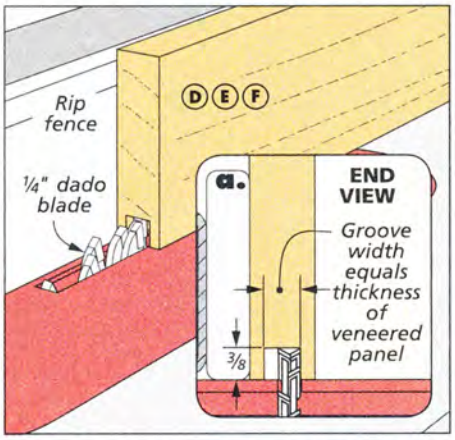

Grooves. Cut centered grooves in all the parts by making two passes, flipping the pieces end for end between each cut.

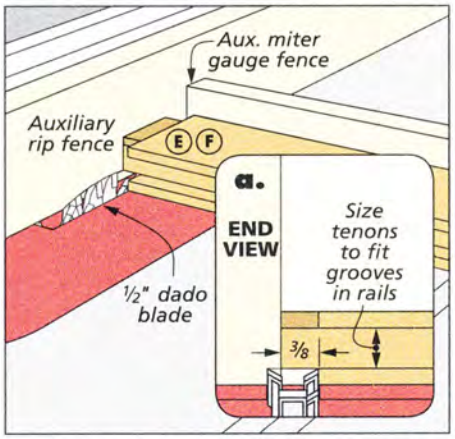

Tenons. Now all that's left is cutting the stub tenons on the stiles. Sneak up on the cut to get a good fit in the grooves.

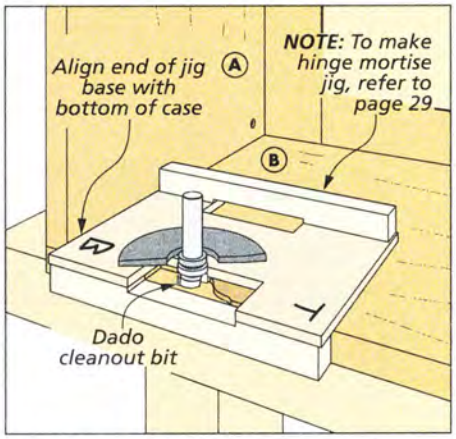

Mortise Hinges. Use this simple jig and a dado cleanout bit to cut the mortises for the door hinges in the cabinet sides.

Add Shelves, DOORS & TOP

After making the cabinet back, the two doors for the front of the cabinet should be familiar territory. That's because the construction of the doors is quite similar to the back. Each door has a pair of rails and stiles that surround veneered plywood panels.

Speaking of those rails and stiles, you may have noticed that the rails on both these doors (as well as the back on the previous page) extend beyond the stiles at the top and bottom. This differs from conventional door construction, but it's a unique highlight that shows up in James Krenov's furniture occasionally. And it doesn't negatively impact the strength of the doors.

If there's any challenge to these doors, it's the fact that they're inset in the opening in the cabinet. If you've ever installed inset doors before, you know that getting a nice fit can be difficult.

One trick I like to use is to leave the rails and stiles just a hair wider than needed. That way, after door assembly you can carefully trim and sand the doors for a perfect fit in the opening.

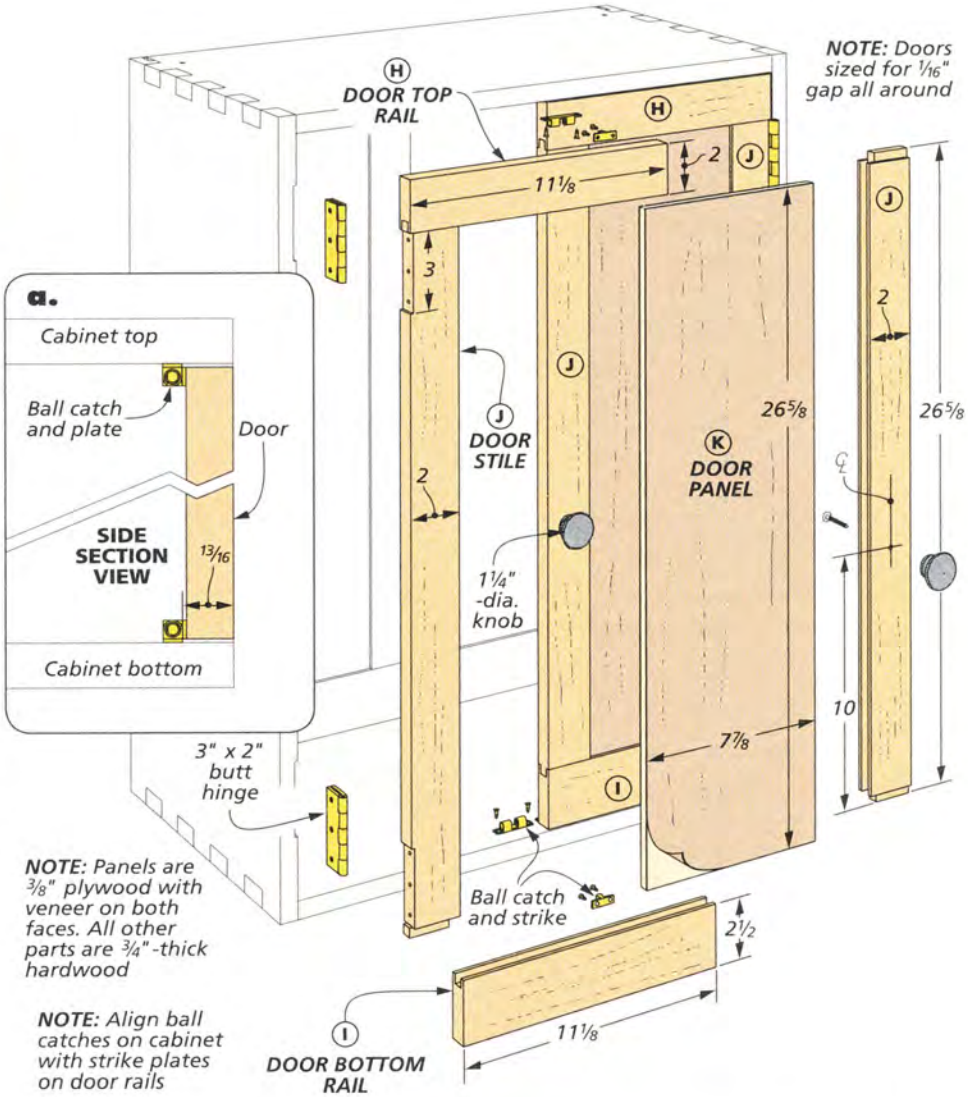

BUILD THE DOORS. With these principles in mind, get started on the doors by cutting all the parts to size. As before, the width of the grooves in the door parts is dependent on the panels, so it's best to veneer the door panels now.

At this point, you can set about cutting the grooves in the door parts to fit those panels, as well as the stub tenons on the stiles. The steps for doing so are the same as those used to create the joinery on the cabinet back (page 33).

With the joinery cut, it's time to assemble the doors. Then check the doors in the cabinet opening, and make any needed adjustments to get a nice fit.

All that's left now is to mortise the edges of the doors to match the mortises in the case. Here again, use the same mortising jig as on the cabinet sides, as shown in the left drawing below. Just be sure to clamp a scrap piece to the door to back up the cut and prevent chipout as you rout the mortise. Now add the knobs and hinges to the doors. Finally, install ball catches to hold the doors closed (detail 'a' above).

How-To: ADD DOORS & TOP

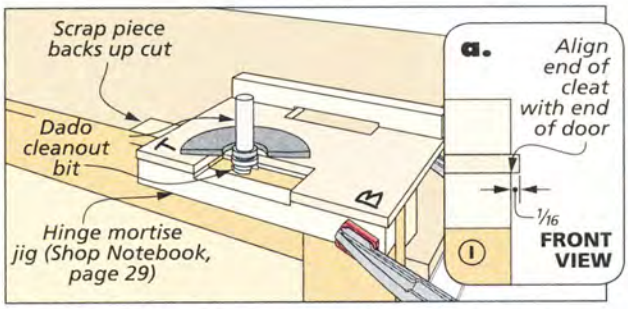

Hinge Mortises. Clamp a scrap piece to the door to back up the cut, and then rout the hinge mortises using a jig and a dado cleanout bit.

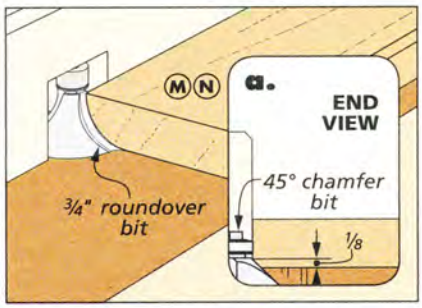

Routed Profiles. Rout the edges of the molding with a roundover (main drawing) and a chamfer (inset).

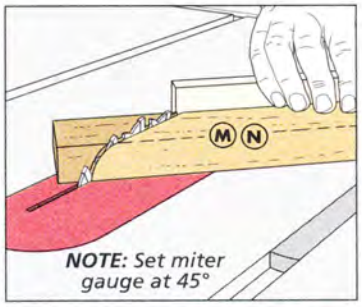

Miter. Trim the top molding pieces at 45° using the miter gauge on the table saw.

SIMPLE SHELVES. Like the case parts, the two shelves are glued-up mahogany panels. So making the shelves should be fairly simple at this stage. Once the glue dries, cut them to size to fit in the cabinet. They rest on shelf supports that fit in sleeves in the cabinet sides, as shown in the drawing at right.

TOP MOLDING. There's just one component of the cabinet left to complete before turning your attention to the stand beneath it. And that's the mitered top. For this assembly, you can start with a piece long enough for the front and both side moldings and rip it to final width. The next steps are routing a roundover and chamfer on this blank, as shown in the lower middle drawings on the previous page.

With the profiles complete, you can set about mitering and fitting the pieces to the top of the cabinet, as shown in the lower right drawing, opposite page.

To account for wood movement, I attached the moldings a little differently. You can see how in detail 'a' at right.

DESIGN OPTION. This cabinet could serve nicely as a large jewelry chest. If you're interested in this possibility, see the option in the box below.

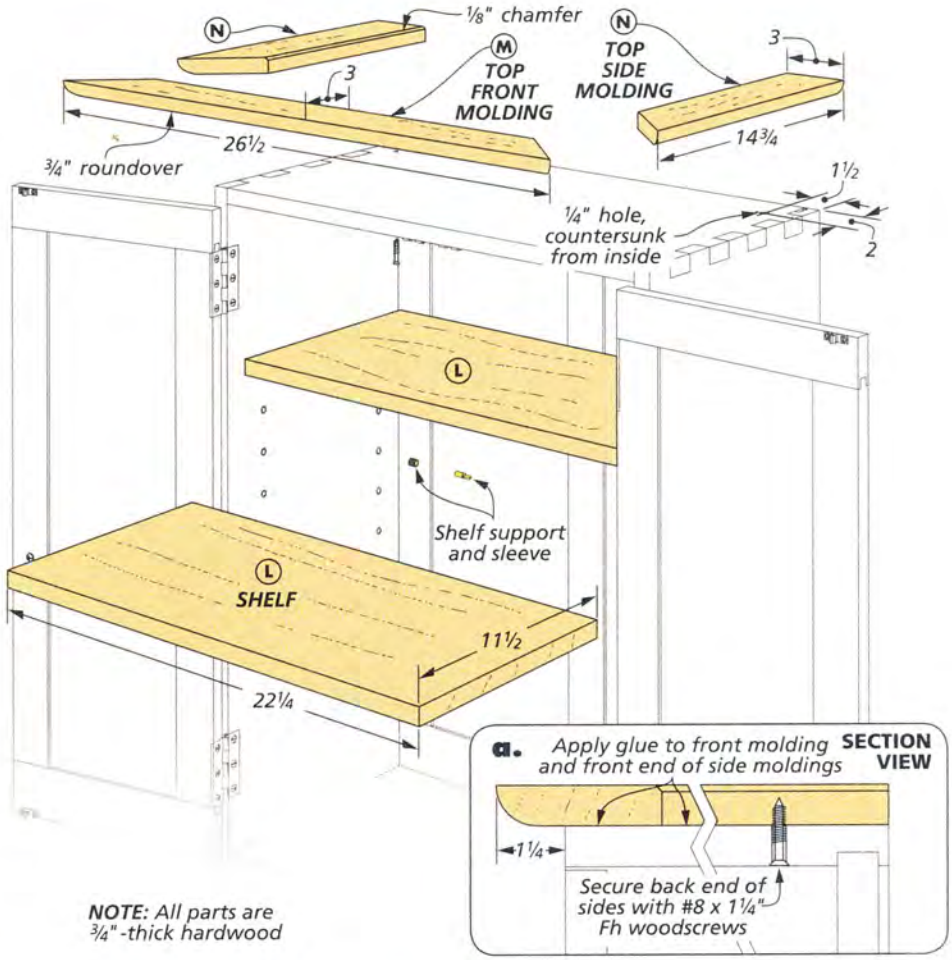

NOTE: All parts are 3/4"-thick hardwood

DESIGNER'S NOTEBOOK

With a few simple modifications, you can turn this cabinet into an elegant jewelry chest. To take the project in that direction, check out the "Online Extras" at Woodsmith.com.

Like the outer case, this inner case features mahogany top, bottom, and side panels that are connected with box joints. Inside, you'll find six drawers that are also assembled with box joints. The drawers are further divided into small jewelry compartments by a series of interlocking grid strips.

Aside from the inner jewelry case, the only other difference is found on the underside of the shelf. It features chain carousel hardware that's used for holding necklaces.

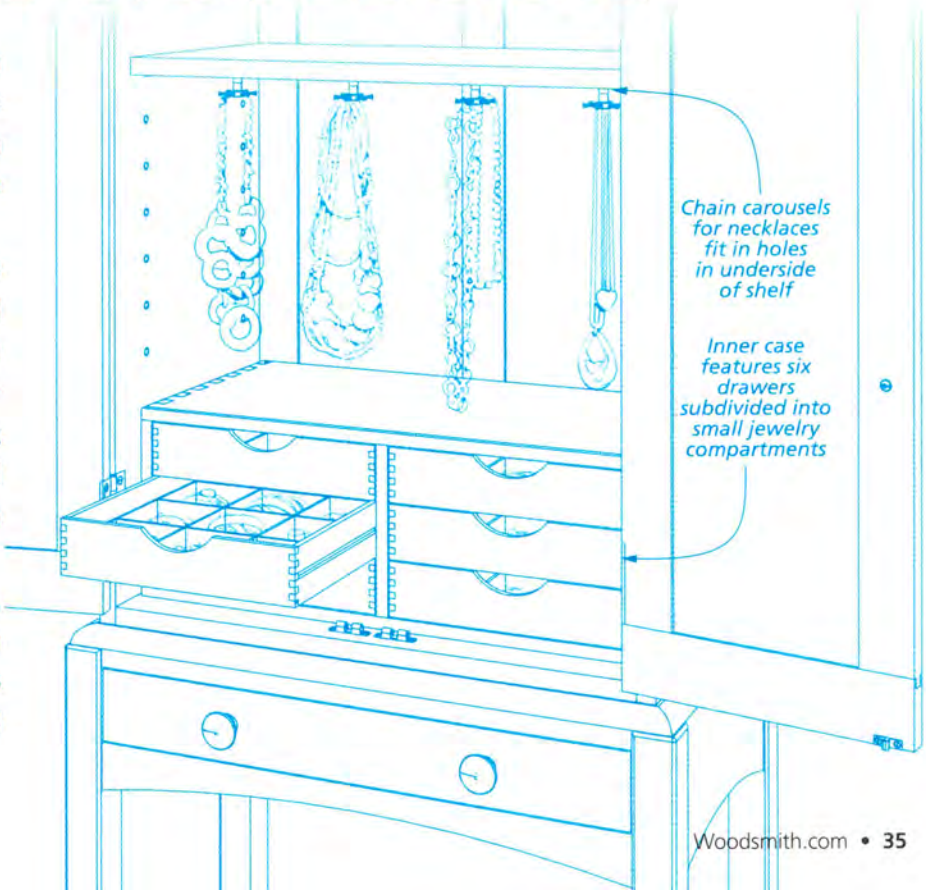

Shape the **STAND LEGS**

Once the cabinet is complete, you can turn your attention to the stand that supports it. A good place to start this process is with the legs.

As you can see in the drawing on the right, there's a lot going on with these legs. They each have mortises on adjacent faces to accept rails that will join them to one another later on. But the most visible design elements of the legs are the flares. As is shown in the drawing, the back legs just flare to the sides. But the front legs flare in two directions, both forward and sideways. This makes them a little more challenging to cut, but I'll walk you through all of the steps involved in making them here.

TURNING BLANKS. The first consideration before making these legs is the wood you use. It's possible to glue up thinner pieces of mahogany to attain the thickness needed for these legs, but there's just one problem with that approach. As you begin to cut the curved flares on the ends of the legs, this process could reveal some of the joint lines between the legs and make for an undesirable appearance.

For that reason, I chose to use thick mahogany turning blanks for the legs instead. You'll find the source for the blanks I used on page 51. Before starting on the joinery and flares, I cut all four leg blanks to their final dimensions at the table saw. Note that the back leg blanks are thinner than the fronts.

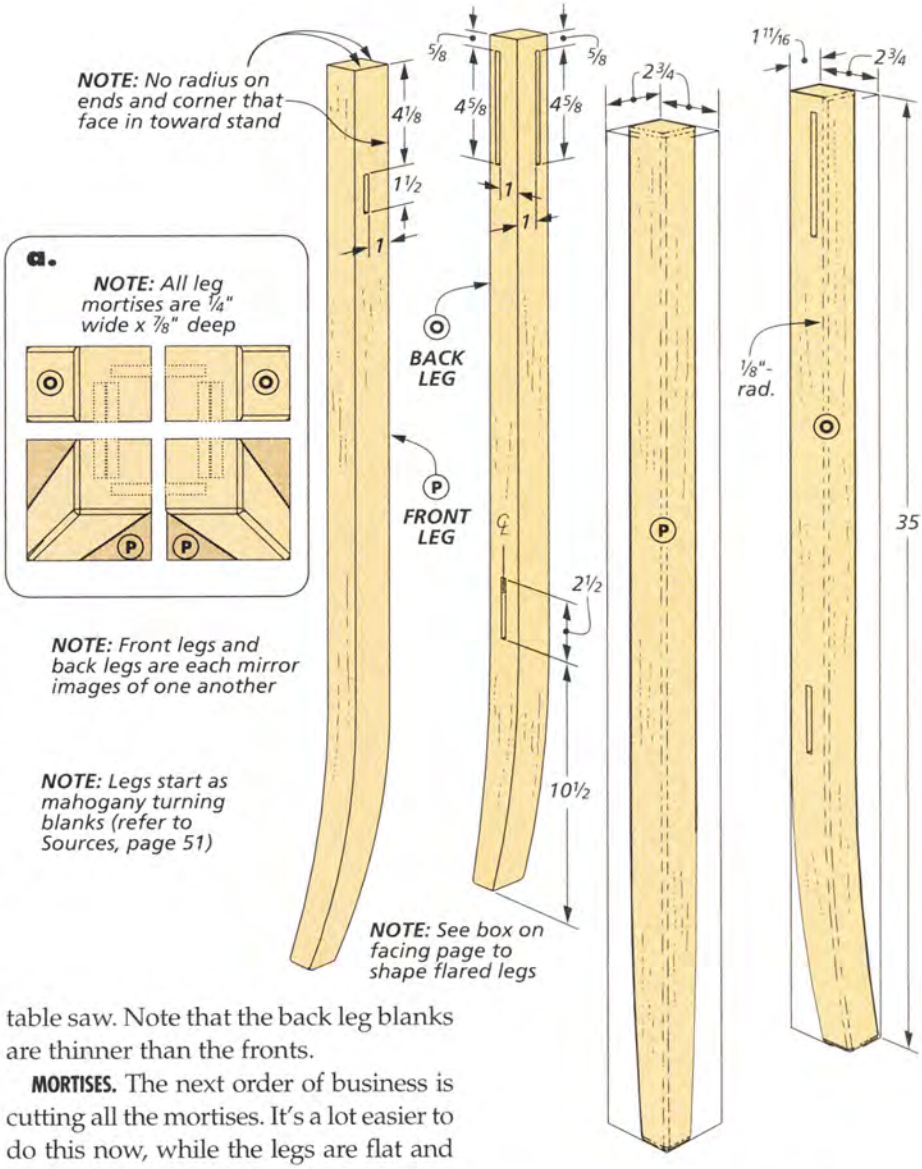

MORTISES. The next order of business is cutting all the mortises. It's a lot easier to do this now, while the legs are flat and square, than it is after cutting the curves.

Before you get started, it's worth noting that laying out and making all the cuts on the legs can get a little confusing if you're not careful. The front legs are mirror images of one another, as are the back legs. I find the best approach to avoiding errors is to lay out and label all the legs before beginning. Then simply take your time and make sure you're always making the cut on the correct face of each leg.

The process I use for making mortises is shown in the two drawings on the left. I start at the drill press, where I remove the bulk of the waste with a Forstner bit (Figure 1). The rest of the work to straighten and square the mortises can be handled with sharp chisels (Figure 2). Of course, you can also use a mortising machine to cut these mortises if you have one in your shop.

FLARED LEGS. With all of the mortises complete, it's finally time to head to the band saw and begin the work on the flared legs. The box on the opposite page provides you with a good overview of the entire process, but I want to point out a few helpful reminders along the way.

How-To: MORTISE THE LEGS

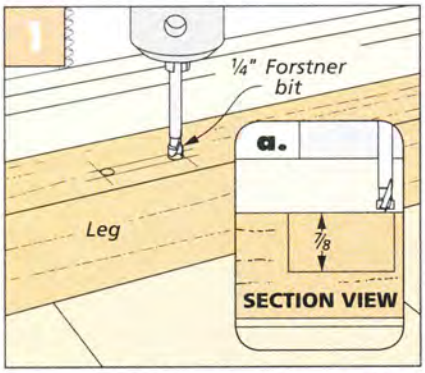

Drill out the Waste. A Forstner bit at the drill press handles the bulk of the work for the leg mortises.

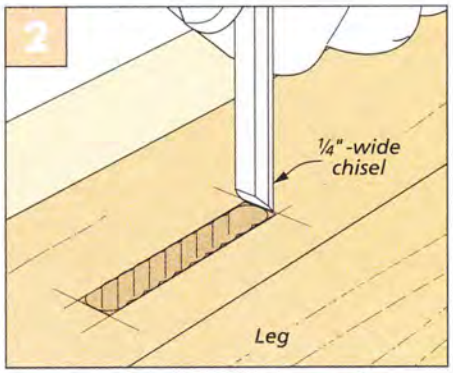

Chisel Square. Use a sharp chisel to square up the corners and edges of each of the mortises.

PATTERN. The pattern provided at right is a good place to start. You can enlarge it and either apply it directly to the leg with spray adhesive, or use it to make a hardboard template for tracing the shape of the leg on the blanks.

For the back legs, you only need to mark the pattern on one face of each leg. On the front legs, you'll want the pattern to be visible on two adjoining faces. Above the curved portion shown at right, the pattern continues in a straight line up the rest of the leg. So you can use a straight piece of hardboard to continue the layout line up the legs, as shown in Figure 1.

MAKE THE CUTS. For all of these cuts, you should be staying slightly outside the layout lines, so you can come back and smooth the shape later on. The back legs are the easiest to cut. You'll just place one face of the blank on the band saw table and cut on both sides of the pattern, as shown in Figure 2.

Now it's time for the front legs. Though they flare in two directions, the process for making them is actually not that complicated. You start by cutting along the pattern on one face of the leg, just as before (Figure 2). Now simply take those two cutoff pieces and reattach them to the leg by wrapping them with strips of masking tape. Rotate the leg 90°, and make the two cuts again to complete the basic shape of the leg (refer to Figure 3).

SMOOTHING & SHAPING. The next step is smoothing all those rough band saw cuts. In order to do this for the long, straight portion of the pattern on each leg, it's easiest to equip a table-mounted router with a long flush-trim bit. Then apply a straight template to the leg and rout it as shown in Figure 4. Repeat the cut to smooth out each rough, straight surface.

A spindle sander is a good tool for smoothing the inside curved portions at the bottom of each leg (Figure 5). Just make light passes and work slowly and carefully to refine the shape. To smooth the outside curves, use a sanding block to smooth out the shape of the flare.

Finally, there's a slight radius on most edges of the legs (main drawing, opposite page). I used a roundover bit on the router table for the straight parts of the legs and hand sanded the curves.

How-To: CUT & SMOOTH THE LEGS

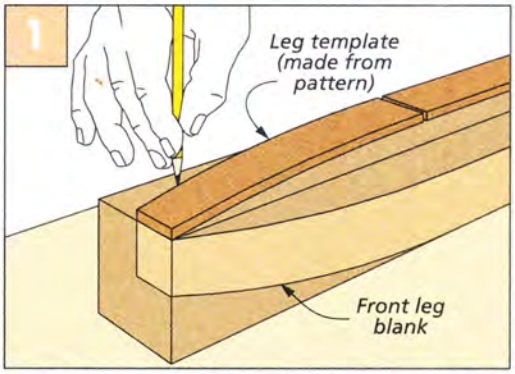

Trace Pattern. Use the pattern at right to make a hardboard template for the leg. Then trace it onto the leg as shown.

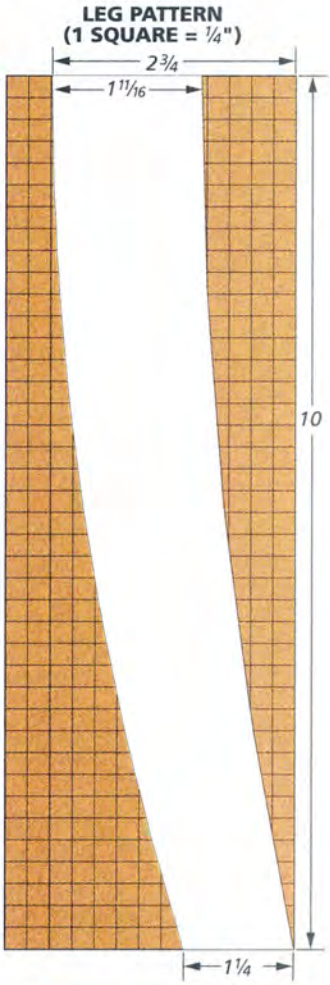

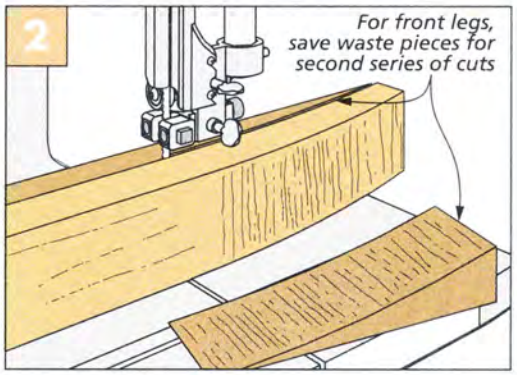

First Cuts. Cut along both edges at the band saw to form the basic shape, staying slightly outside the layout lines.

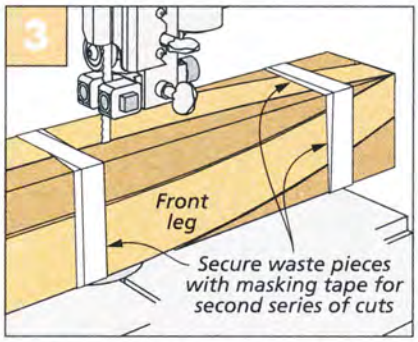

Second Cuts. For the front legs, tape the waste pieces back on, rotate the leg, and cut again.

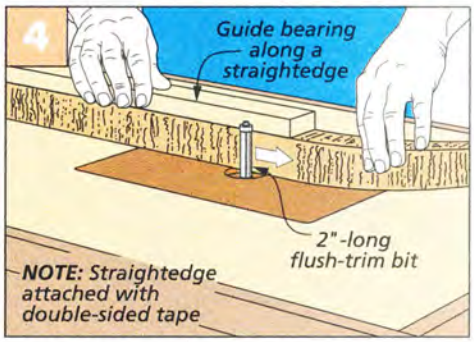

Rout It Smooth. Use a flush-trim bit running along a straight board to smooth the long, straight portions of the legs.

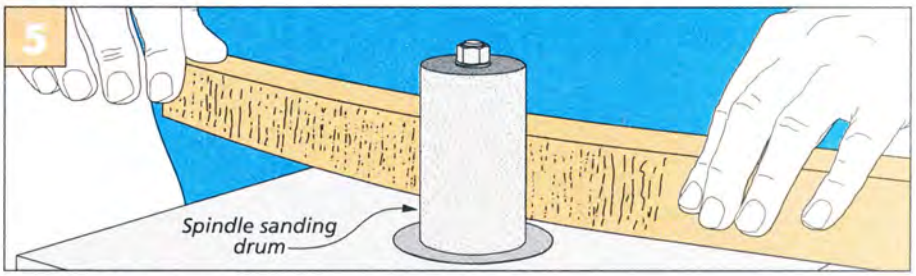

Sanding Drum. A spindle sander is useful for shaping and smoothing the inside curved portions at the bottom ends of the legs. Take your time, and make light passes to refine the shape of the leg flares.

Complete the **STAND**

The legs are connected to one another by a series of rails and stretchers to form the basic shape of the stand. I started by connecting each front leg to its mating back leg with upper and lower side rails to form a side assembly. Once that's done, you can bring in the rest of the rails and stretchers to complete the stand.

SIDE RAILS. The upper and lower side rails are similar, with a few subtle differences. They each have tenons on the ends and a gentle arc cut along the bottom. But the upper rails are wider and have grooves on their inside faces to accept drawer runners. The lower side rails each have a mortise on the inside face for accepting a stretcher later on.

After cutting the rails to size, you can get started on the tenons. I chose to cut these using a dado blade at the table saw, as shown in Figure 1 below.

Next, it's time to tackle the different elements of the rails. I cut the grooves on the inside faces of the upper side rails (see Figure 2). Then I moved to the drill press to take care of the mortises on the lower side rails (Figure 3). Once again, a sharp chisel took care of the cleanup work.

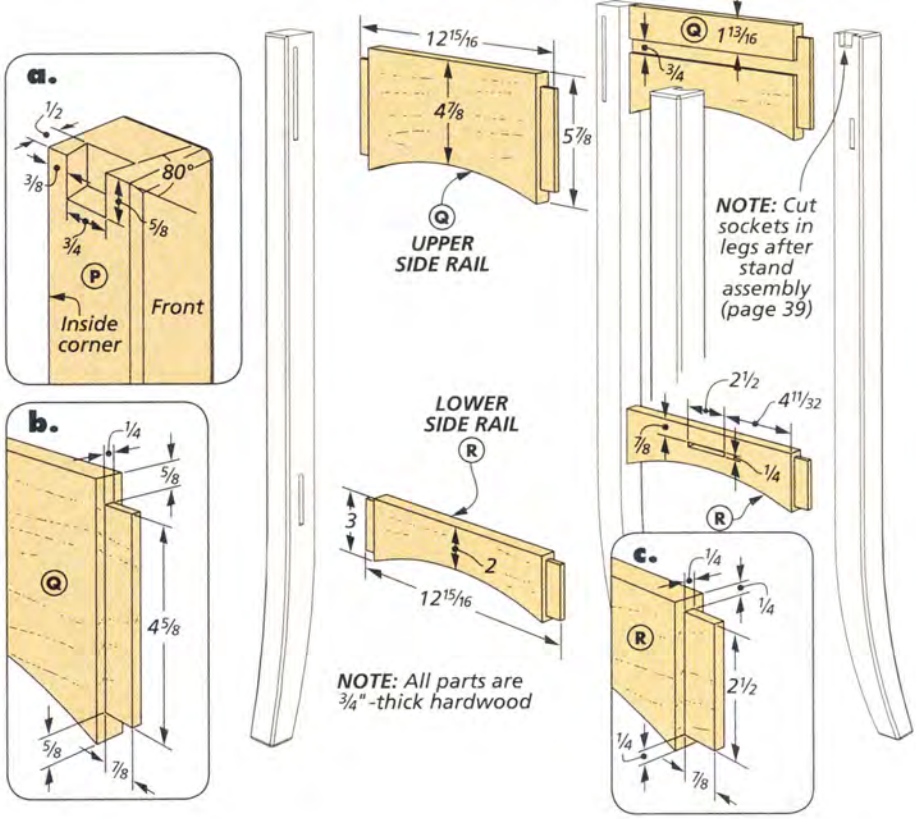

The last stop was the band saw, where I cut the gentle arcs along the bottom of all four rails (Figure 4). With all this work complete, I switched to sandpaper to sand the rough edges of the arcs smooth.

GLUE UP THE SUB-ASSEMBLIES. Once the work is complete on the side rails, you can put together each side assembly, which consists of a front leg, back leg, and upper and lower side rails. While the glue dries, you can get started on the parts that connect the two sides.

RAILS & STRETCHERS. The remainder of the stand is made up of a back rail, a stretcher, and an upper and lower front rail. I cut all these parts to size from mahogany now, except for the upper front rail. I saved that one for later, and I'll explain why in a minute.

The back rail, stretcher, and lower front rail all have tenons on the ends that fit in mortises in the legs. Here again, you can use a dado blade at the table saw and an auxiliary miter gauge fence to cut the tenons. Test the fit in the mortises as you go.

The back rail and the lower front rail also have gentle arcs along the bottom edges. Just as before, lay these out, and cut them at the band saw. Then sand the arcs smooth.

ASSEMBLE THE STAND. Even though the upper front rail is not complete yet, you can go ahead and assemble the stand

How-To: MAKE THE RAILS

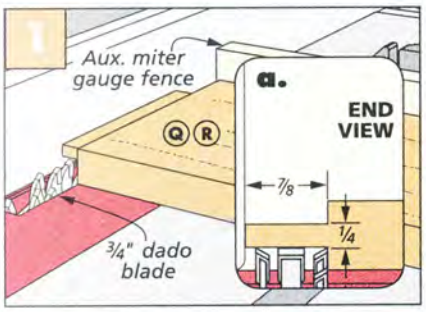

Tenons. Cut the tenons on the ends of the rails using a table saw equipped with a dado blade.

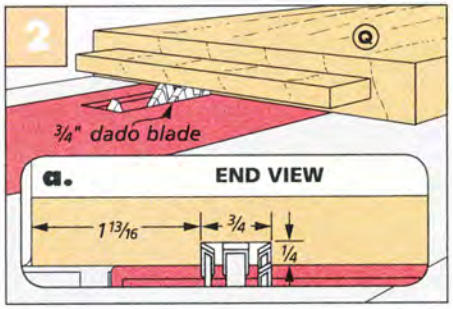

Grooves. The grooves on the inside faces of the upper side rails are easy to make with a dado blade.

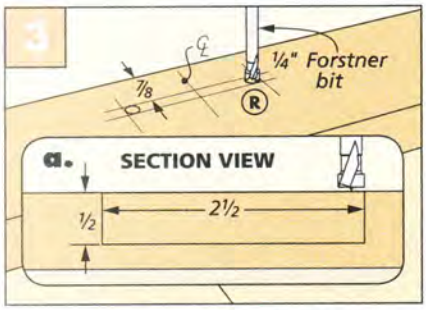

Mortises. You can turn to the drill press to waste out the mortises on the inside faces of the lower side rails.

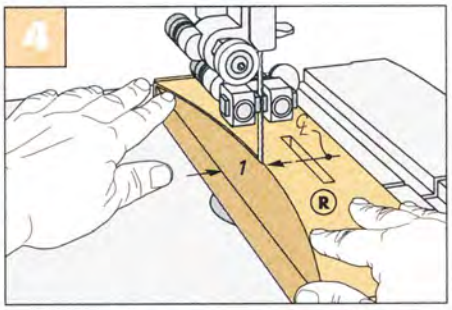

Arcs. Lay out arcs on each of the side rails, and cut them to shape at the band saw. Then sand them smooth.

without it. The unique dovetail joint between this piece and legs is actually easier to make once the stand is assembled. So for now, fit the back rail, lower front rail, and stretcher between the two side assemblies, and bring the whole stand together with glue and clamps.

UPPER FRONT RAIL. When it came time to attach the upper front rail, I used a different joint to really lock the stand together. It's a dovetail tenon that fits in a socket at the top end of each leg. The box below gives you an overview of how to complete this joint.

I started by sizing the upper front rail, and then cutting the dovetail tenon on each end. I formed the shoulders at the table saw and then completed the tenon with a hand saw (lower left drawing). The bottom cheek of each tenon is also cut away slightly, which you can take care of at the table saw with a dado blade, as shown in the middle drawing below.

The easiest method for cutting an accurate socket on the legs is to use the upper front rail itself as a guide. To do this, set it in place on top of the front legs and mark the shape of the socket with a pencil. Now mark the depth of the socket on the face of the leg. Then use a hand drill and a Forstner bit to remove most of the waste from the socket. All that's left is a little chisel work to complete the socket, as shown in the lower right drawing. Keep checking the upper front rail in the socket until you get a nice, flush fit.

TOP FRAME. The stand is capped with a top frame made up of four pieces. The front and sides of the frame are joined with miters. The back simply fits between the sides with butt joints (main drawing above).

After cutting the parts and checking the fit of the miters, drill holes in the front and back pieces (detail 'c'). The holes will be used to connect the cabinet to the stand with hardware later on.

Next, rout a roundover on the top edges of the front and sides of the frame. Then you can glue and clamp the pieces to the tops of the rails and legs.

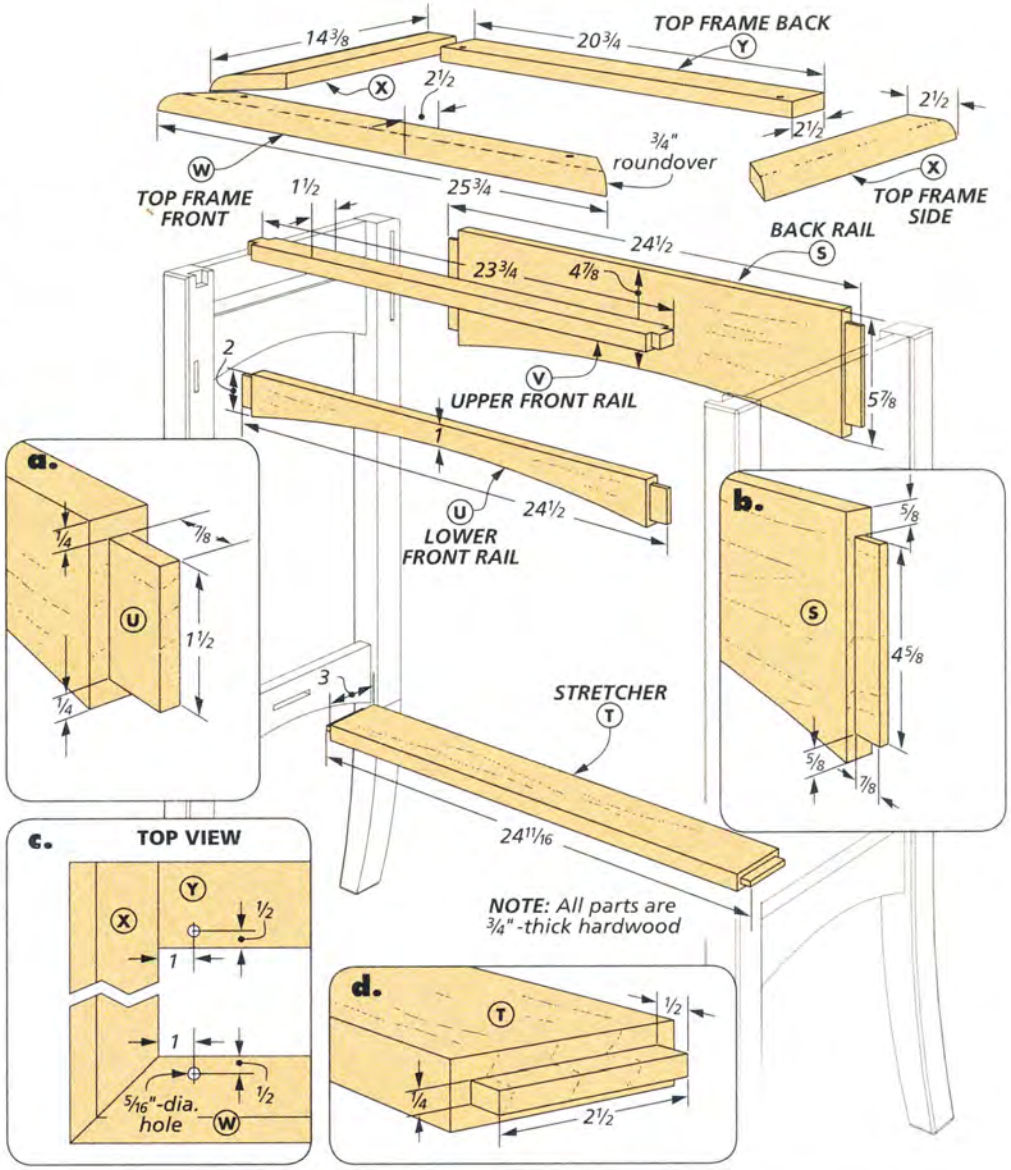

How-To: JOIN THE UPPER RAIL TO THE LEGS

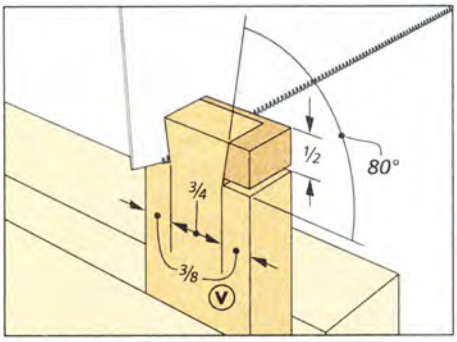

Dovetail Tenon. After you cut the shoulders at the table saw, trim the dovetail tenon with a hand saw.

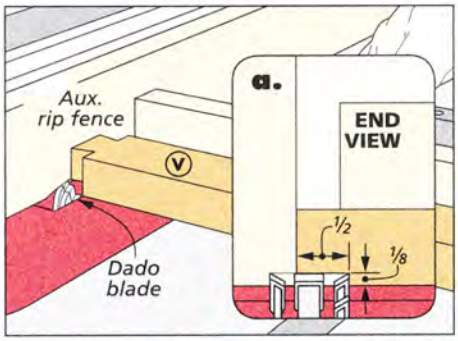

Trim Bottom. To cut away the bottom cheek of each dovetail tenon, just pass it over a dado blade on the table saw.

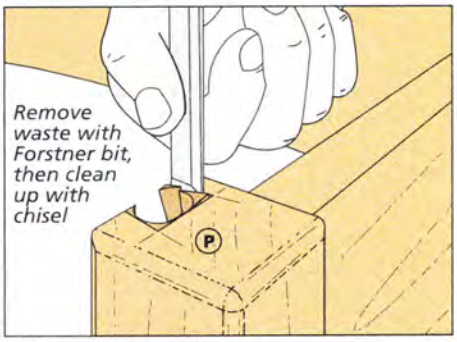

Chisel Socket. After laying out the socket on the legs, drill out the waste and clean up the cut with a sharp chisel.

Drawer & ASSEMBLY

Your heirloom cabinet and stand are nearing completion. All that's left is to add a drawer to the stand and then connect the cabinet to the stand.

DRAWER RUNNERS. Before building the drawer, I made and installed the drawer runners shown in the drawings at right. By having these in place first, you can check the drawer parts for a nice fit and an even reveal all around. The drawer runners are shaped as shown in the left two drawings below. Then they're glued and clamped into the grooves in the upper side rails.

DRAWER. The drawer features a couple of different types of joinery. The drawer front is joined to the sides with locking rabbets. But the back of the drawer simply fits into a pair of dadoes (detail 'd'). These joints are quick work at the table saw. While you're at it, cut a groove in all the parts to accept the plywood drawer bottom (detail 'b').

Before assembling the drawer, you'll want to cut a groove in the outside face of the drawer sides to fit over the runners (also shown in detail 'b'). I suggest making this cut in a scrap piece first, and checking the fit on the runners in the stand. This is a good test of how the drawer will fit in the stand, so you want to take the time to get it right.

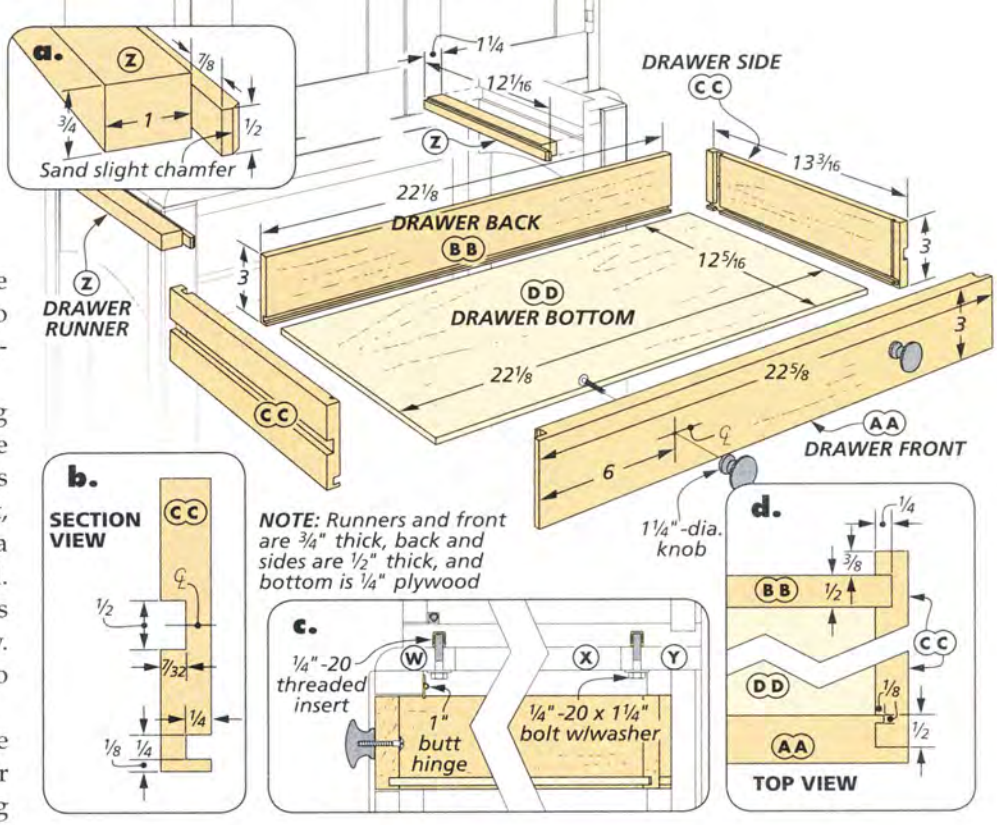

Once the fit is to your liking, glue up the drawer and add the knobs to the front. I also installed a simple hinge on the back edge of the upper front rail to serve as a stop to prevent the drawer from pulling all the way out (for more on this, refer to Shop Notebook on page 29).

FINAL ASSEMBLY. Now is a good opportunity to take a break to apply stain and finish to the project. The details can be found on page 51. Then it's time to attach the cabinet to the stand.

The cabinet is secured to the stand by bolts driven through the stand's top frame and into threaded inserts in the underside of the cabinet. To do this, I positioned the cabinet above the stand and marked the locations for the threaded inserts using the technique shown in the right drawing below.

Now you can drill the stopped holes and install the threaded inserts in the underside of the cabinet. Reposition the cabinet above the stand, and drive in bolts with washers to secure it (detail 'c').

No matter what you decide to store inside your elegant new cabinet, it's sure to be a treasured piece of furniture. W

How-To: DRAWER RUNNERS & ASSEMBLY

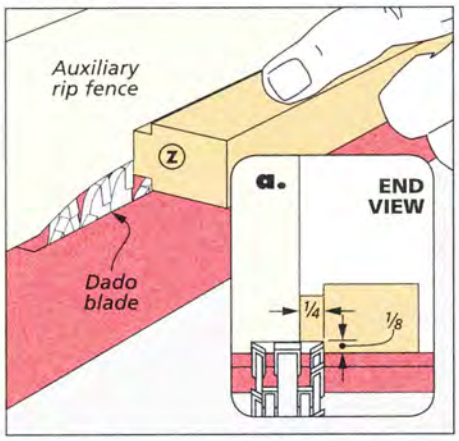

Rabbets. A pair of rabbets cut with a dado blade reduce the runner's thickness to fit a groove in the drawer side.

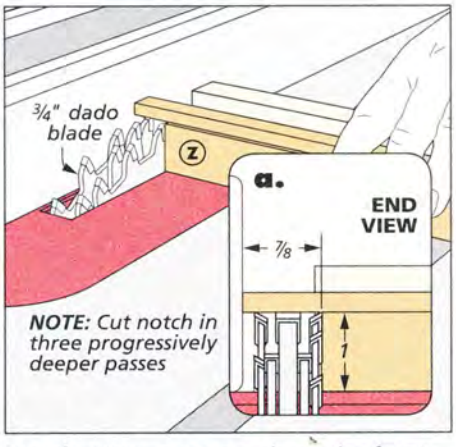

Notch. Next, cut a notch on the front end of each drawer runner to wrap around the front leg of the stand.

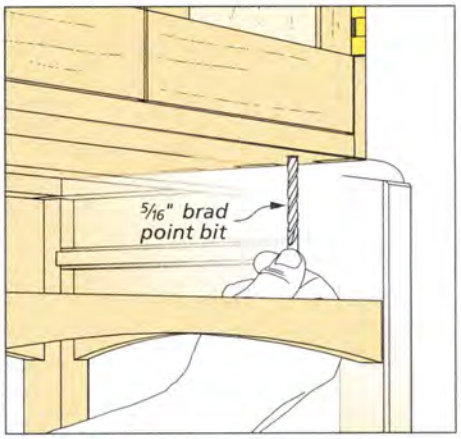

Mark Cabinet. Position the cabinet, and mark through the holes in the top frame for threaded inserts.

Materials, Supplies & Cutting Diagram

A Top/Bottom (2)	3/4 x 13 1/2 - 24
B Sides (2)	3/4 x 13 1/2 - 32
C Back Top Rail (1)	3/4 x 2 1/4 - 23
D Back Bottom Rail (1)	3/4 x 2 3/4 - 23
E Back Stiles (2)	3/4 x 2 1/4 - 26 3/4
F Back Middle Stile (1)	3/4 x 2 - 26 3/4
G Back Panels (2)	3/8 ply. - 9 x 26 3/4
H Door Top Rails (2)	3/4 x 2 - 11 1/8
I Door Bottom Rails (2)	3/4 x 2 1/2 - 11 1/8
J Door Stiles (4)	3/4 x 2 - 26 5/8
K Door Panels (2)	3/8 ply. - 7 7/8 x 26 5/8
L Shelves (2)	3/4 x 11 1/2 - 22 1/4
M Top Front Molding (1)	3/4 x 3 - 26 1/2
N Top Side Moldings (2)	3/4 x 3 - 14 3/4
O Back Legs (2)	1 11/16 x 2 3/4 - 35
P Front Legs (2)	2 3/4 x 2 3/4 - 35
Q Upper Side Rails (2)	3/4 x 5 7/8 - 12 15/16
R Lower Side Rails (2)	3/4 x 3 - 12 15/16
S Back Rail (1)	3/4 x 5 7/8 - 24 1/2
T Stretcher (1)	3/4 x 3 - 24 11/16
U Lower Front Rail (1)	3/4 x 2 - 24 1/2
V Upper Front Rail (1)	3/4 x 1 1/2 - 23 3/4
W Top Frame Front (1)	3/4 x 2 1/2 - 25 3/4
X Top Frame Sides (2)	3/4 x 2 1/2 - 14 3/8
Y Top Frame Back (1)	3/4 x 2 1/2 - 20 3/4
Z Drawer Runners (2)	3/4 x 1 1/4 - 12 1/16
AA Drawer Front (1)	3/4 x 3 - 22 5/8
BB Drawer Back (1)	1/2 x 3 - 22 1/8
CC Drawer Sides (2)	1/2 x 3 - 13 3/16
DD Drawer Bottom (1)	1/4 ply. - 12 5/16 x 22 1/8

- (8) 1/4" Shelf Supports
- (32) 5/16" Shelf Support Sleeves
- (4) 3" x 3" x 36" Mahogany Turning Blanks
- (8) 10" x 28" Sycamore Veneer Pieces
- (4) 3" x 2" Butt Hinges w/Screws
- (4) 1 1/4"-dia. Shaker Knobs
- (4) Ball Catches w/Strike Plates
- (2) #8 x 1 1/4" Fh Woodscrews
- (1) Small Box Hinge w/Screws
- (4) 1/4"-20 Threaded Inserts
- (4) 1/4"-20 x 1 1/4" Hex Bolts
- (4) 1/4" Washers

3/4" x 7" - 60" Mahogany (2.9 Bd. Ft.)

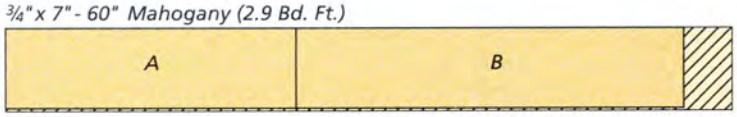

3/4" x 7" - 60" Mahogany (2.9 Bd. Ft.)

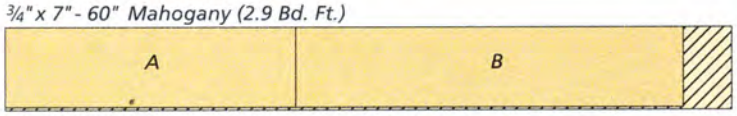

3/4" x 7" - 60" Mahogany (2.9 Bd. Ft.)

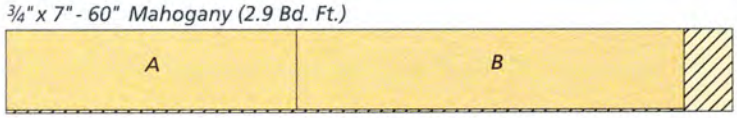

3/4" x 7" - 60" Mahogany (2.9 Bd. Ft.)

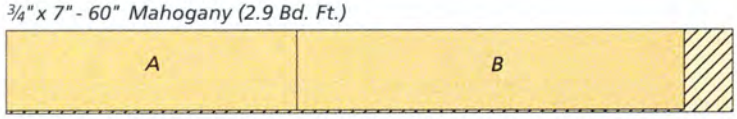

3/4" x 6" - 48" Mahogany (2.0 Bd. Ft.)

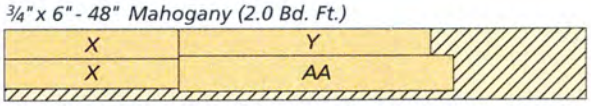

3/4" x 1 1/2" - 36" Hard Maple (0.4 Sq. Ft.)

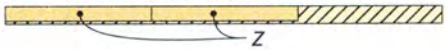

1/2" x 6 1/2" - 36" Hard Maple (1.6 Sq. Ft.)

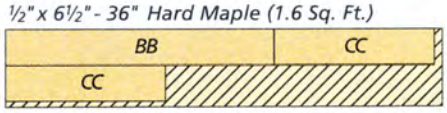

ALSO NEEDED: *One 24" x 60" Sheet of 3/8" Baltic Birch Plywood, One 24" x 24" Sheet of 1/4" Maple Plywood*

3/4" x 6" - 96" Mahogany (4.0 Bd. Ft.)

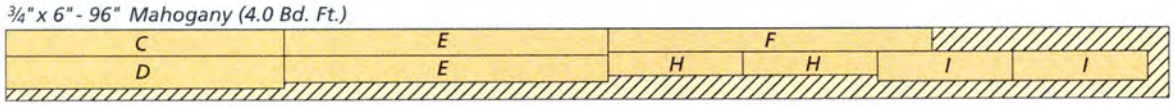

3/4" x 7 1/2" - 96" Mahogany (5.0 Bd. Ft.)

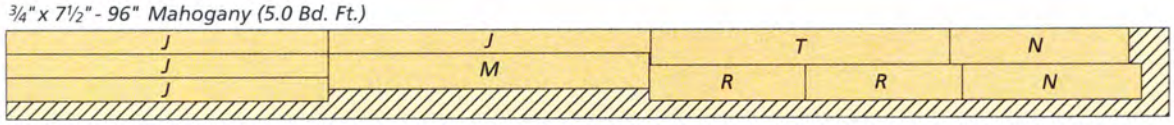

3/4" x 6 1/2" - 96" Mahogany (4.3 Bd. Ft.)

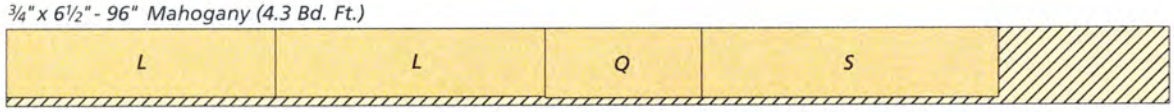

3/4" x 6 1/2" - 96" Mahogany (4.3 Bd. Ft.)

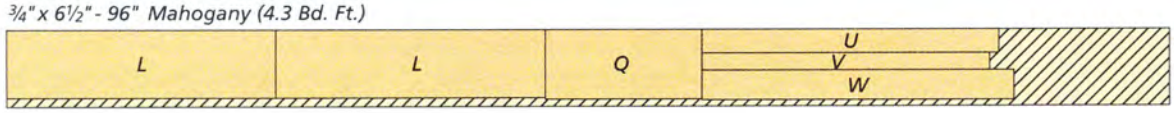

spray can Finishes

I'm always on the lookout for a better, easier, or faster way to finish my projects. Frankly, anything that can prevent the headaches of streaks and dust nibs would make me happy. The answer, of course, is to spray the finish. That usually means an expensive spray rig with a gun and big compressor. But unless you're a pro and there's a check waiting for you when you complete the project, it's hard to justify that level of expense.

▲ Most popular types of finish are available from the top manufacturers in handy aerosol spray cans.

The good news is that there's an easy answer that's often overlooked. Most of today's most popular finishes are available in aerosol cans. And the quality of the finish you can get using them is something you can be proud of.

WHAT'S OUT THERE? A quick walk through the paint section of any home center or hardware store turns up everything from oil and water-based polyurethane in high-gloss, medium, and flat, to shellac and several types of lacquer. You can even find several kinds of special formulas with colored tints. In short, virtually all of your go-to finishes can be found in a can.

In addition to the variety, there are a few things about aerosol finishes that make the job go smoothly. First, you don't need any expensive equipment. Second, since most sprayed finishes dry quickly, you don't have to contend with dust nibs nearly as much as with a brushed finish. Finally, there's no gun to clean. Just throw away the empty can.

Much of the volume in a spray finish is solvent that flashes off fairly quickly, leaving a nearly dry surface only minutes after spraying. The advantage to this is you can do several coats in a single day. Finally, when it's done, just pop off the valve and soak it in solvent, put the lid on the can, and walk away.

PREPARATION. Okay, all that convenience does require a little preparation. Most important is finding a good spot to set up a spray area. The first choice is outdoors, unless you have a well-ventilated shop and a dedicated finishing area.

If not, the requirements are pretty simple. For starters, you'll need a window or a door you can use to vent the fumes. You'll also want to cover anything in the area, so it doesn't end up "finished," as well. Plastic painter's drop cloths are great for this.

It's important to take into account the temperature and humidity as detailed in the instructions on the can. If you're spraying outside, the wind can be a problem. So a fan blowing out a shop window can be a viable alternative.

Once you've set up your finishing area, include a stable platform or lazy Susan for the project, like the one shown in the box below.

TECHNIQUES. After the final sanding and dust removal, you're ready to start spraying your project. Once again, check the directions on the can. You'll find the optimum distance to maintain from the spray can to the surface. It's usually somewhere in the neighborhood of 10" to 12". The key is to start spraying before you're pointing at the project and move the can without stopping from one end to the other. The drawing above shows the technique. It's important to maintain an even distance. You don't want to move your arm in an arc. That leaves a heavier coat in the center.

The goal is to build up a spray finish using several light coats rather than a few heavy (and probably runny and saggy) coats. I like to start with the inside surfaces, like in the top photo at left. This makes it easier to clean up runs on the inside of the project when you move on to the outside. You'll also have developed an even, controlled stroke as shown in the middle photo at left.

Repeat this stroke, slightly overlapping each one until you've covered the surface. It's also a good idea to begin at the top and work your way down so you can control the spray more easily and prevent runs and drips. I keep a lint-free cloth partially soaked in the solvent for the finish I'm using to wipe away problems before they can set in.

GIVE IT A REST. After the first coat, let it rest for awhile. The time will vary depending on the finish, the temperature, and humidity in the area. You'll know it's ready for a second coat when it's dry to the touch. I like to do about three coats per day, followed by an overnight rest. A light sanding the next day, and you can repeat the process. You'll be surprised at the great result. A sprayed-on finish can add a professional look to your projects.

Spray Techniques

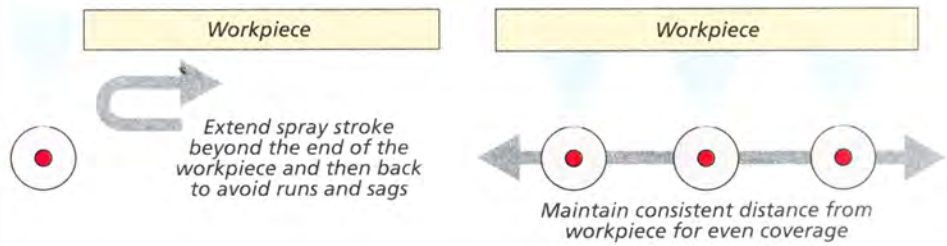

Starting with the inside of the project, make light passes, being careful not to let the finish puddle in the corners.

For the outside, get in the habit of starting to spray before moving on to the project and continuing past the edge.

By keeping the project elevated, you can spray an even coat on the lower edges as well, without excess finish dripping off.

LAZY SUSAN FINISHING PLATFORM

Whenever I set out to spray a finish, I first set up my lazy Susan platform, shown at right. It's pretty easy to make.

All you need is the lazy Susan bearing and a couple pieces of plywood. If the project is a big one, you can simply attach a larger piece of plywood to the top. Just be sure to keep the weight centered. Then you can spray without the need for any contortions while trying to reach a tricky spot on the project.

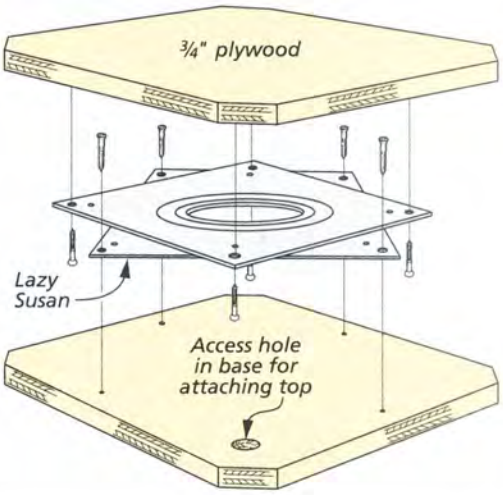

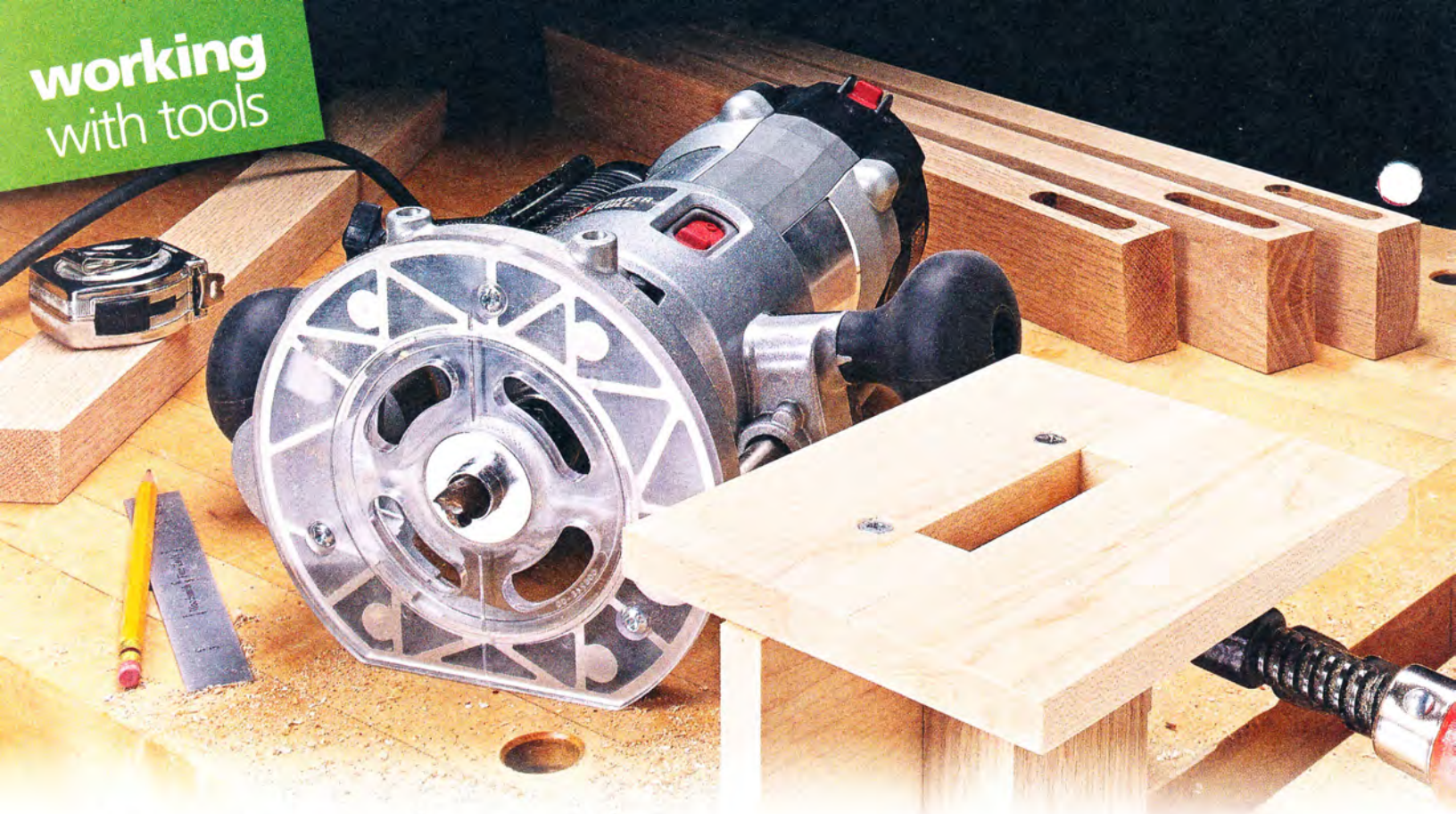

great results with Guide Bushings

A guide bushing is a fairly basic router accessory. But using one can open up a world of possibilities for the tool. Once your router is equipped with a guide bushing, cuts like box joints, dovetails, mortises, and even sign-making are all now in play.

Many manufactured tools like dovetail jigs or sign-making kits will either include a bushing or specify which size to use with the jig. However, as your skills increase, you'll probably find more uses for guide bushings in your woodworking. For example, I'm a big fan of routing mortises using a guide bushing (main photo above).

▲ Bushings are available in both brass and steel and come in several diameters to use with different sizes of router bits.

THE RIGHT BUSHING FOR YOUR ROUTER. The most important consideration when choosing guide bushings, of course, is to find bushings that fit your router. The common, 1$\frac{3}{16}$"-dia. guide bushings (originally made by *Porter-Cable*) have become fairly standard, and many routers from other manufacturers will accept these bushings.

However, some routers, like certain *Bosch* or *Festool* models, require a different type of bushing, so you'll want to check the opening in the baseplate before you buy. Often, you'll also be able to purchase an adapter or a universal router baseplate to make one style of bushing fit on another manufacturer's router.

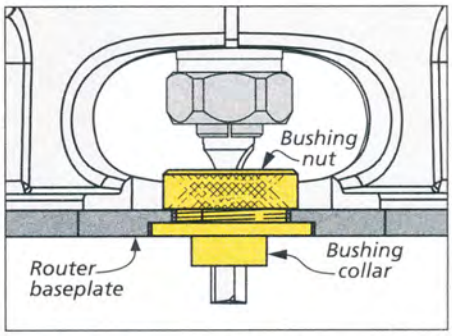

BUSHING ANATOMY. Regardless of these differences, all guide bushings operate the same way. They have an opening at the bottom that allows the router bit to pass through, as shown in the photos at left. The *Porter-Cable* style bushings are made up of two parts: a collar with the opening in it and a nut that threads onto the collar. As you can see in the drawing above, the collar goes on the outside face of the router baseplate and allows the bit to pass through. The nut threads onto the collar from the inside face of the baseplate to lock it in place.

BUYING BUSHINGS. Bushings are available in both brass and steel. Frankly, I don't think one material has a huge advantage over the other. The brass ones are softer, so they're less likely to damage a router bit if the bit and bushing were to come in contact with one another in use.

In particular, one type of brass bushing might be worth a closer look. That's the *Whiteside Precision Guide Bushing* (photo below). Many guide bushings are stamped or machined without much precison, which can lead to incorrect bushing dimensions and result in inexact cuts. But the *Whiteside* bushings are machined to tighter tolerances.

They also come with centering pins to establish the position of the bushing in the router baseplate before installing the bit. This is important, as a bit that's not centered will not produce accurate results and can even cut into the bushing. If the pin is off-center, you can fix the problem by adjusting the position of either the bushing or the router baseplate, depending on the router model.

▲ *Whiteside Precision Guide Bushings* are machined to tight tolerances, so you can be sure they're accurate.

CONSIDERING KITS. You'll often find bushings available in multiple-piece kits for $40 or more. The only problem with these kits is that they contain several bushings with obscure dimensions that you probably won't use much. Instead, I recommend just buying the individual bushings that you need.

WORKING WITH BUSHINGS. For many bushing-related tasks, such as routing dovetail joints, the jig manufacturer does the work of choosing the correct bushing for you (photo at right). If you want to make your own jigs for use with bushings, though, you'll need to consider the diameter of both the bit and the bushing you're going to use before you begin sizing the jig parts.

As a general rule, I choose a bushing with an outside diameter 1/8" larger than the diameter of the bit I'm going to use. (For example, a 3/8" bushing for a 1/4" bit, or a 5/8" bushing for a 1/2" bit.) This provides the needed clearance around the bit while routing.

With this setup, there's a 1/16" offset between the edge of the bushing and the cutting edge of the bit all around the perimeter of the bushing. So you'll need to keep this in mind when sizing jigs or templates that you'll be using with the guide bushing.

If you'll be routing within an opening, such as the mortising jig shown above, then you'll need to size the opening to account for the offset on two sides (1/8" wider and longer than the desired size of the mortise in this example). In situations where you'll only be routing one edge, such as along the side of a template, you only need to account for the offset on one side.

If you're looking to open up some new opportunities for your router, I think you'll agree that guide bushings are a great way to do it. It just requires a little setup to create precise and accurate joinery and other unique cuts. W

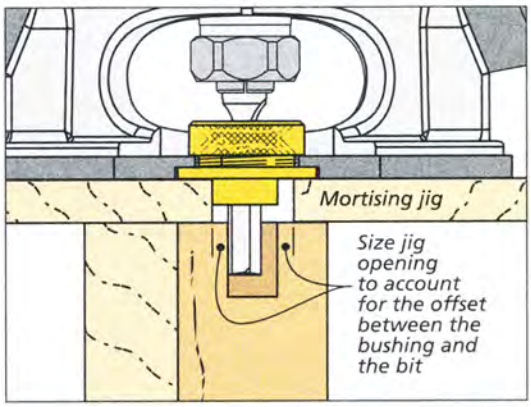

▲ Guide bushings are a must for following the comb-like template on a dovetail jig. The jig often comes with the correct bushing to use.

BUSHING TIPS & TRICKS

Some guide bushings feature a collar that's too long to work with the jig you have in mind. Fortunately, it's easy to remedy this situation by just sanding down the soft metal with coarse sandpaper (near right). Another issue with guide bushings is the nut sometimes works itself loose in use. You can solve this problem by slipping a rubber O-ring between the collar and the nut, as shown in the far right photo.

▲ Coarse-grit sandpaper applied to a flat surface (like a table saw top) allows you to quickly reduce the length of the collar.

▲ A rubber O-ring locks the threads of the bushing nut to the collar to prevent it from rattling loose in use.

the essential Block Plane

If I were only allowed to have one hand tool in my power tool-filled shop, I would choose a block plane without giving it a second thought. It's the handiest, most versatile tool I own.

▲ Though they're three different sizes, these are all block planes with a bevel-up blade. They each excel at different tasks.

WHY A BLOCK PLANE? Whether you need to clean up the splinters left after cutting plywood, or quickly chamfer the end of a tenon so it slides into a mortise more easily (as in the photo above), a block plane is the tool for the job. It can clean up just about any saw marks, tearout, or other imperfections on a workpiece. And some are sized just perfectly to fit into an apron pocket.

WHAT IS IT? The smallest member of the family of hand planes, a block plane is designed to fit in your hand for small detail work or any of the tasks I mentioned earlier. You'll find several kinds of block planes on the market from a variety of manufacturers.

Many of them are sized according to their specific task. The violin maker's plane in the photo at left is one example. It's just a smaller version of a standard-angle block plane.

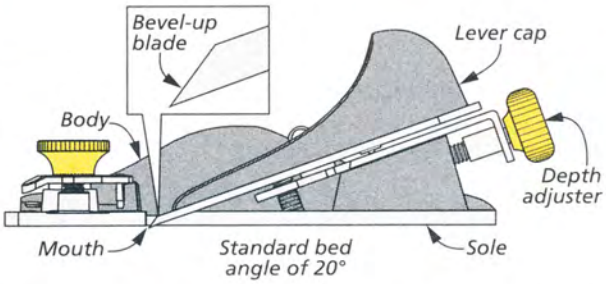

But the characteristic that really defines a block plane is the fact that the blade is bedded with the bevel up. Most bench planes hold the blade with the beveled edge facing down. The cutting angle is then fixed by the angle at which the blade is bedded, usually 45° or 50°.

STANDARD MODEL. A standard block plane (bottom photo at left) is what you'll want for most of your everyday needs. This plane beds the blade at 20° and the blade is sharpened at 25° for an effective cutting angle of 45°. Although this angle is the same as that of many bench planes, the plane will cut with less chatter because the cutting edge is

better supported by the sole. You can also adjust the mouth on some standard block planes for super-fine shavings.

LOW-ANGLE. As the name implies, a low-angle block plane beds the blade at a lower angle than a standard plane, usually around 12°, for a 37° cutting angle. The middle plane at the bottom of the opposite page is one example. This lower cutting angle makes it uniquely qualified to make certain cuts, especially in end grain where a lower angle helps shear the wood fibers.

SETTING UP A BLOCK PLANE. The drawing on the opposite page shows the parts of a block plane. You'll need to remove the lever cap to get the blade out of the body. Once you've flattened the back, sharpened, and honed the bevel, you can reassemble the plane. But don't tighten the the cap iron yet. Leave it just a bit loose, so you can turn the depth adjuster.

Now you can set the depth of cut by exposing more or less of the cutting edge. The depth adjuster at the back of the plane is used to move the blade forward or back as needed. When you feel it's close, tighten the lever cap (not too much, just enough to stop the blade from moving). Take a few strokes and repeat until you've dialed in the perfect setting.

TASKS

I've discovered all kinds of common, everyday tasks that a block plane can do. Some make your work better, and others make it quicker or easier. On top of that, there are even some handy variations on block plane design. One of the more popular types, a skew block plane, is shown in the box below.

▲ A block plane is the go-to tool for fitting cabinet doors and drawers. It removes saw and planer marks and trims the edges for a perfect fit.

FINAL FITTING OF JOINERY. Fitting a frame and panel door is easier with a block plane. Use it to take off those last few whispery shavings to level the surface of the mating rails and stiles. You'll reach for it again when you fit the door into the cabinet, as in the photo above.

DOVETAILS & BOX JOINTS. A low-angle block plane makes short work of trimming the end-grain fingers or tails that sit proud of the surface (photo at left). End grain can be stubborn, but if you brush on some mineral spirits, it softens a bit and cuts nicely.

▲ When you need to level the end grain of a box joint or a dovetail, the low-angle block plane is the best tool for the job.

CHAMFERING AN EDGE. You can also reach for a block plane when you need a few chamfers on a small project. No need to set up the router table. A few strokes with a block plane will get you there. I usually make a pencil mark on the top and side to define the chamfer first.

REMOVING JOINTER MARKS. For small parts, a couple passes with the block plane is all you need to clean up the ridges left by a jointer and produce a smooth surface.

EASY TO CARRY. A block plane is also handy at the lumberyard. If you want to see the color and figure of a board under a rough or discolored surface, a few strokes with a plane is all it takes.

Once you've become accustomed to having a block plane, you'll wonder how you ever did without one. W

SKEW BLOCK PLANE

In addition to the traditional block planes shown above, there are several specialty planes designed for specific tasks. The *Veritas* skew block plane at right is one of them. If you cut a rabbet on the table saw, chances are the blade will leave marks on the surfaces of the workpiece. With this block plane, you can make them disappear in just a few strokes.

This specialized plane has the mouth open on one side, allowing the blade to reach all the way into the inner corner. The unique design beds the blade at a low 12° angle. In addition, the cutting edge of the blade is skewed to 15°, resulting in a smoother cut. It's the perfect tool for cleaning up the faces of rabbets. It's become my go-to tool for edge work of all kinds.

▲ This skew block plane from *Veritas* is the plane I reach for whenever I cut a rabbet. The mouth is open on one side to cut all the way into the corner. On the opposite side you can install a fence to control the cut.

9 shop-tested Measuring & Marking Tips

The tape measure and steel rule are the fundamental measuring tools for every project in my shop. And using them seems like it should be second nature.

Yet it's amazing how many errors are introduced this early in the woodworking process. The key to success is to incorporate some sound principles into how you measure and mark — and then use them each and every time you reach for your measuring and marking tools. Here are the tips that I try to keep in mind.

▼ Here are a just a few of the helpful measuring tools that you'll want to keep handy in your shop.

[1] Choose the Right Tools

As with most things, you get what you pay for when it comes to measuring tools. The tape measure should be a brand you can trust. Also, you can probably get by with a smaller 10' or 12' tape for the shop, rather than a 25' model that a carpenter might use. For steel rules, choose an etched option instead of one that is stamped or painted. They're typically more accurate (photo at left).

[2] Use the Same Tools

When you get busy working in the shop, there's a tendency to reach for whatever measuring tool is handy when setting up a cut. However, I make an effort to use the same tape measure or rule for all the parts in the same project, particularly mating parts. Markings on tape measures and rules can vary from brand to brand and even tool to tool, so using the same tool can take some possibility for error out of the process.

[3] Let Your Tape Shift

Speaking of error, one commonly misunderstood fact about tape measures has to do with the little bit of "play" you may notice in the hook at the end of the tape. Contrary to popular belief, this isn't a design flaw that's introducing errors into your projects. Rather, this built-in wiggle allows the tape to adjust to make an accurate outside measurement or inside measurement.

It all depends on where you place the hook of the tape measure for the measurement at hand. Essentially, the shift is intended to match the thickness of the hook, so it either adds or subtracts

itself from the dimensions shown based on whether you push or pull on it for a particular measurement.

[4] Simplify Centers

The main photo on the opposite page shows a simple tip I've been using for years. To find the center of a piece, don't fuss around with calculating half of an odd dimension. Instead, simply tilt the tape measure or rule until the opposite end or edge of the workpiece lines up with a whole number (such as 8"). Then you can mark the center much more easily (right at 4" in this example).

[5] Try a Hook Rule

In my shop, I've come to rely on a hook rule for project part layout (near right photo, above). The reason is simple: With a standard rule, you're still often guessing as to whether or not you are truly lined up with the end or edge of the board. The hook rule takes this guesswork out of the equation by letting you hook right to the end or edge of the piece.

[6] Turn It on Edge

Since a hook rule is placed on its edge, it also allows you to mark more precisely

▲ Hook rules take the guesswork out of placing the rule on the end or edge of a workpiece before marking it.

by aligning the pencil with the marking on the rule itself. This is more exact than marking with a rule on its face, which could introduce slight errors due to the thickness of the rule. So when extreme precision is needed, such as for mortise or tenon dimensions, I'll also turn a standard rule on edge when marking.

[7] Take Two Measurements

When measuring inside a drawer or cabinet, the tendency is to bend the tape into a corner, which can create inaccuracy. Instead, I like to measure to a fixed dimension (like 10"), and then measure back to that from the other side (photos at right). Then simply add the two numbers together to get the total dimension. This results in a more accurate measurement.

[8] Use the Rule on the Tool

When you're getting ready to make a cut, use the same measuring device to both mark the workpiece and to set up the tool itself for the cut. For example, I'll always use my steel rule to set the

▲ For accurate inside dimensions, mark a fixed point (above), and then measure back to it from the other direction (below).

distance from the table saw blade to the rip fence (below left).

[9] The Right Place

Finally, you want to think about where to measure and mark a workpiece based on the tool you'll be using to cut it. For example, if it's a miter saw cut, you should measure and mark the face of the board to line up with the blade. At the table saw, it's the front leading edge or end that you'll want to measure and mark (photos below). It's just another simple way to improve accuracy. W

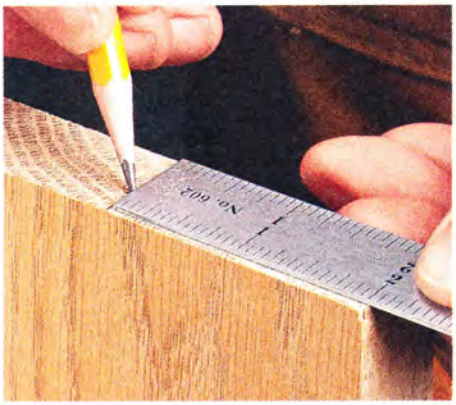

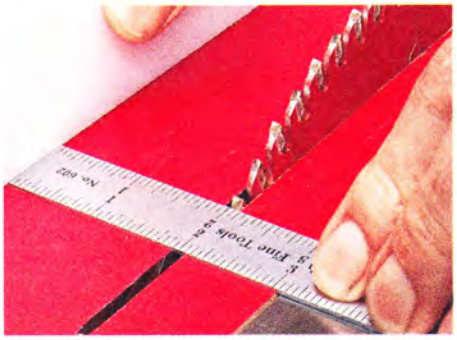

▲ Using the same rule to both measure the part (above) and set up the tool (below) is a good double-check of accuracy.

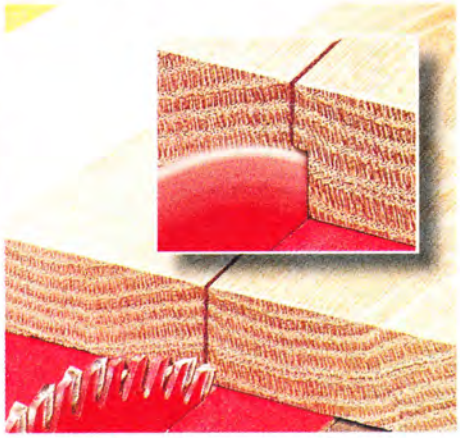

▲ For table saw cuts, mark the bottom end or edge of the workpiece, since this is what contacts the blade first.

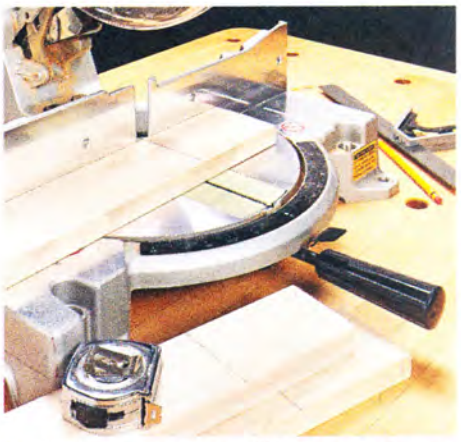

▲ On the miter saw, you'll be cutting the top face of the workpiece first. So this is the area to mark when setting up the cut.

questions & answers

CUSTOM ROUTER BIT MANUFACTURERS

Carbide Specialties Inc.
800-678-3313
carbidespecialties.com

Orbit Tool Works
888-425-7130
orbittools.com

Vexor Custom Woodworking Tools
877-879-8906
vexorcwt.com

custom Router Bits

Q *I'm restoring an old house with an unusual molding. I know you can get custom-made shaper blades to match the molding, but I don't have a shaper. Can I have a router bit made to match the profile?*

Mark Wells
Bradenton, Florida

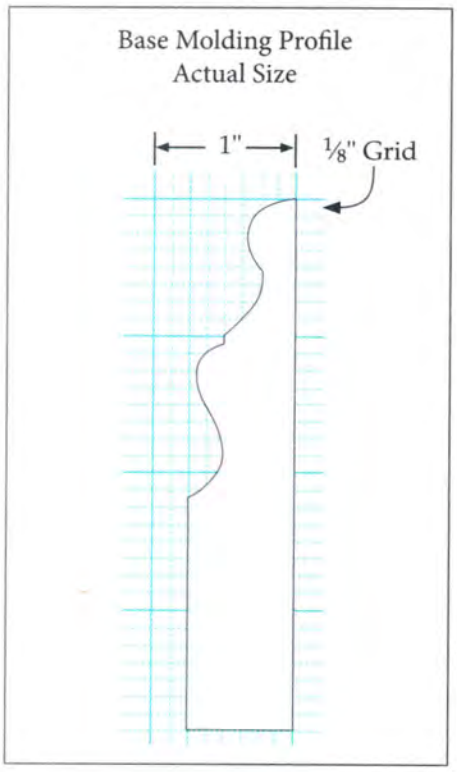

A You're in luck, Mark. A few months ago, our Art Director, Todd Lambirth, experienced a similar problem. He had a bit made. In the photo above you can see the result. There are several high-quality tool manufacturers that can make a router bit to your specifications. A few are listed in the box above. Todd used *Orbit Tool Works* to have his bit made. But most of the other companies follow a very similar process. It starts with your request.

VITAL INFORMATION. Your task begins by drawing a pattern of the profile you need. You can trace the profile of the molding onto a sheet of grid paper. But if you're not comfortable with your drawing skills, you can also just cut off a small piece of the molding and send it in, instead. The manufacturer will then generate a CAD drawing done to a very tight tolerance and mail it to you for final approval.

DESIGN. At this point, you can either ask for changes or accept the drawing and make your payment. All of the companies I spoke to have the same policy — they won't begin manufacturing the bit until your payment is received. This price can range from $100 to $250 for a single bit, depending on the complexity of the design. Todd's custom bit cost $180.

Sound expensive? Compared with the cost of tearing out the old molding and replacing it all with a different pattern, it's a drop in the bucket. And considering the time and energy going into the bit, it's really not too bad.

MAKING THE BIT. In most cases, the bits are made using a five-axis CNC grinder. The cutters are made from high-quality carbide, brazed to a steel body on a ¼" or ½" shank and balanced to eliminate performance problems at high speeds. You even have the choice of 2-, 3-, or 4-flute cutters.

Turnaround time is less than 30 days for all the manufacturers I contacted. Some say they send most orders out in two weeks. Another benefit is your profile is given a part number, and you can reorder a new bit at any time.

PERFORMANCE. The real question is how the bit performs. Todd was more than pleased with the result. It not only saved time and money in the long run, but it matched the original molding perfectly (photo above). So the cost of the bit is only one consideration. After all, it's hard to put a price on getting a job done exactly the way you want it. W

hardware & supplies
Sources

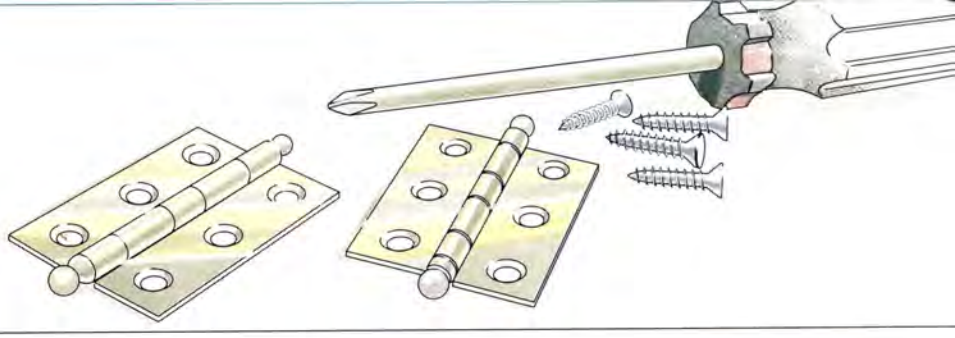

Most of the materials and supplies you'll need to build the projects are available at hardware stores or home centers. For specific products or hard-to-find items, take a look at the sources listed here. You'll find each part number listed by the company name. See the right margin for contact information.

DUST COLLECTION *(p.8)*

The PVC pipe and fittings are available at home centers. The black plastic fittings, blast gates, and remote can be found at *Rockler*, *Lee Valley*, or *Woodcraft*.

DREMEL FORTIFLEX *(p.10)*

- **Home Depot**
  Fortiflex Kit. 9100-21

BENCH HOLD-DOWNS *(p.12)*

- **Lee Valley**
  Veritas Hold-Down . . .05G14.01
  Fast-Action Hold-Down . .05G47.01
  Surface Clamp 05G19.01
  Hold-Down Clamps . . 16F02.10
- **Lie-Nielsen**
  Holdfast. 1-Holdfast
- **Kreg Tool**
  Bench Klamp. . . . .KKS-KBKSYS
- **Home Depot**
  Jorgensen Hold-Down 1652

PICTURE FRAMES *(p.17)*

The picture frames were stained with one coat of *General Finishes* Java gel stain. Then two coats of lacquer were applied.

COFFEE TABLE *(p.20)*

- **Constantine's**
  Anigre Flexible Veneer FV40
- **Lee Valley**
  1" Furniture Glides . .06W01.02

The cherry components of the coffee table were stained with a mixture of two parts *Zar* Cherry stain and one part *Woodkote* Cherry Jel'd stain. Then the entire table was sprayed with two coats of lacquer finish.

CABINET ON STAND *(p.30)*

- **Lee Valley**
  Shelf Supports 05H20.01
  Shelf Support Sleeves . .05H20.05
  Small Box Hinge 00D30.17
  Ball Catches 00W12.01
  3" x 2" Butt Hinges . .00D03.04
- **Constantine's**
  Mah. Turning Squares . . 4TS53
  Sycamore Stand. Veneer . .V81A
  1¼"-dia. Disc Knobs 94V5B

The mahogany portions of the cabinet were stained with a mixture of two parts *Zar* Cherry stain and one part *Woodkote* Cherry Jel'd stain. The knobs were stained with *General Finishes* Java gel stain. Then the entire cabinet was sprayed with two coats of lacquer finish.

GUIDE BUSHINGS *(p.44)*

Router guide bushings are available individually or in kits from a number of the woodworking suppliers listed on the right. The *Whiteside Precision Guide Bushings* mentioned in the article were purchased from *Woodcraft*. Item numbers vary based on the diameter of the bushing.

BLOCK PLANES *(p.46)*

The *Stanley* block plane is available from most of the online retailers. *Lie-Nielsen* planes are available directly from the manufacturer. *Veritas* planes are sold by *Lee Valley*.

Get the all-new Season 7 DVD set of the *Woodsmith Shop*! The set includes two DVDs with all the episodes plus a CD-ROM with bonus plans and articles. Collect the entire series by ordering individual seasons for $29.95 or save with package deals. Learn more at Woodsmith.com!
DVD Set: Season 7..... $29.95

MAIL ORDER SOURCES

Project supplies may be ordered from the following companies:

Woodsmith Store
800-444-7527

Rockler
800-279-4441
rockler.com

amazon.com

Constantine's
954-561-1716
constantines.com

General Finishes
generalfinishes.com

Home Depot
800-466-3337
homedepot.com

Kreg Tool
800-447-8638
kregtool.com

Lee Valley
800-871-8158
leevalley.com

Lie-Nielsen
800-327-2520
lie-nielsen.com

Woodcraft
800-225-1153
woodcraft.com

Woodkote
800-843-7666
woodkote.com

Zar
zar.com

Online Extra

cabinet on stand

Jewelry Box

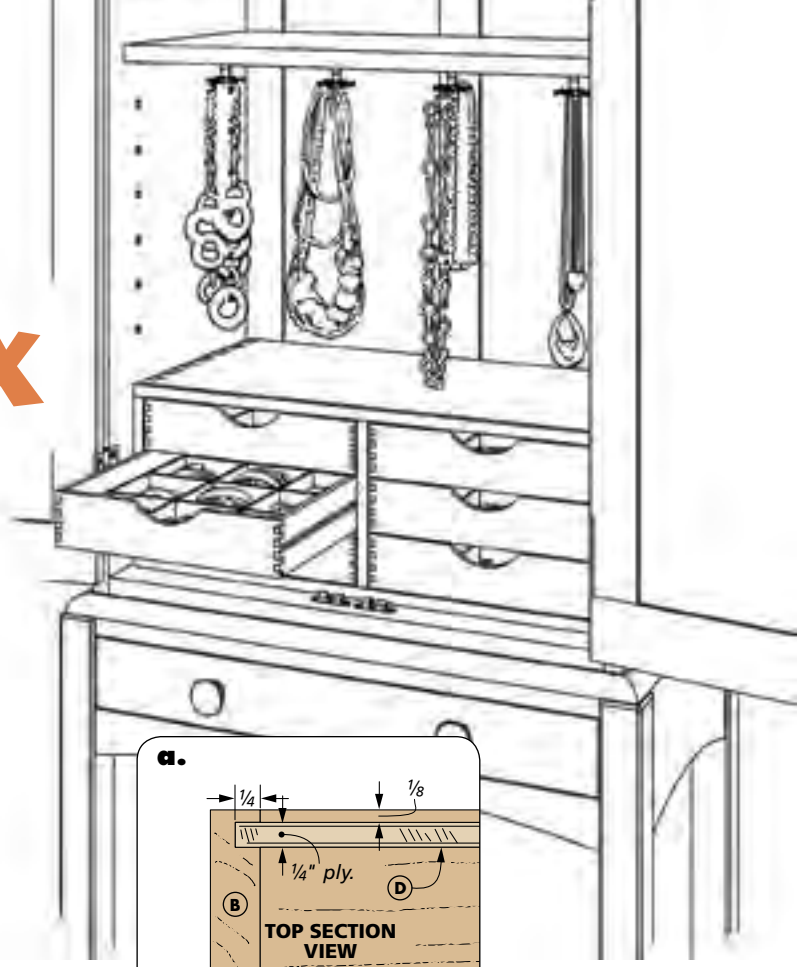

All on its own, the cabinet on stand from Woodsmith No. 215 is a nice-looking piece of furniture. But you can give the cabinet even more function by adding the inner jewelry box shown on the right. It's a solid mahogany case that's assembled with box joints, just like the main case. Inside, it holds six drawers that are further sub-divided by interlocking grid strips. I also added four chain carousels to the underside of the shelf for necklaces.

CASE CONSTRUCTION. As shown in the drawing below, the jewelry box case consists of top, bottom, side, and divider pieces made from hardwood and a plywood back panel. You can get started by gluing up narrower boards for the top, bottom, sides, and divider and then cutting all the parts to final size.

The box joints are the next order of business. These are smaller than the box joints on the main cabinet (¾" wide x ½" deep), so I made them using the technique shown on page 14 of the issue. I simply modified the jig for ¾"-wide box joints instead of ¼". But other than that, the technique is the same.

The top, bottom, and sides are grooved to accept the plywood back panel (detail 'a'). And there are dadoes in the top and bottom that hold the divider (detail 'b'). Finally, cut a series of dadoes in the sides and dividers to hold drawer runners (detail 'c'). All of these cuts are easy to make with a dado blade at the table saw.

ASSEMBLY. Some of these parts, like the runners and stops shown at right, would be difficult to add once the case was assembled. So I cut them to size and glued them in place first. Once that was done, I glued up the entire case with the back in place. Then I cut and glued the edging on the front. There will be two small (¼" x ¼") openings near the back, top corners of the case sides from the groove, but you can cut two tiny plugs to fill these.

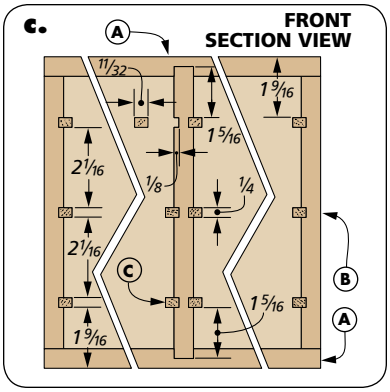

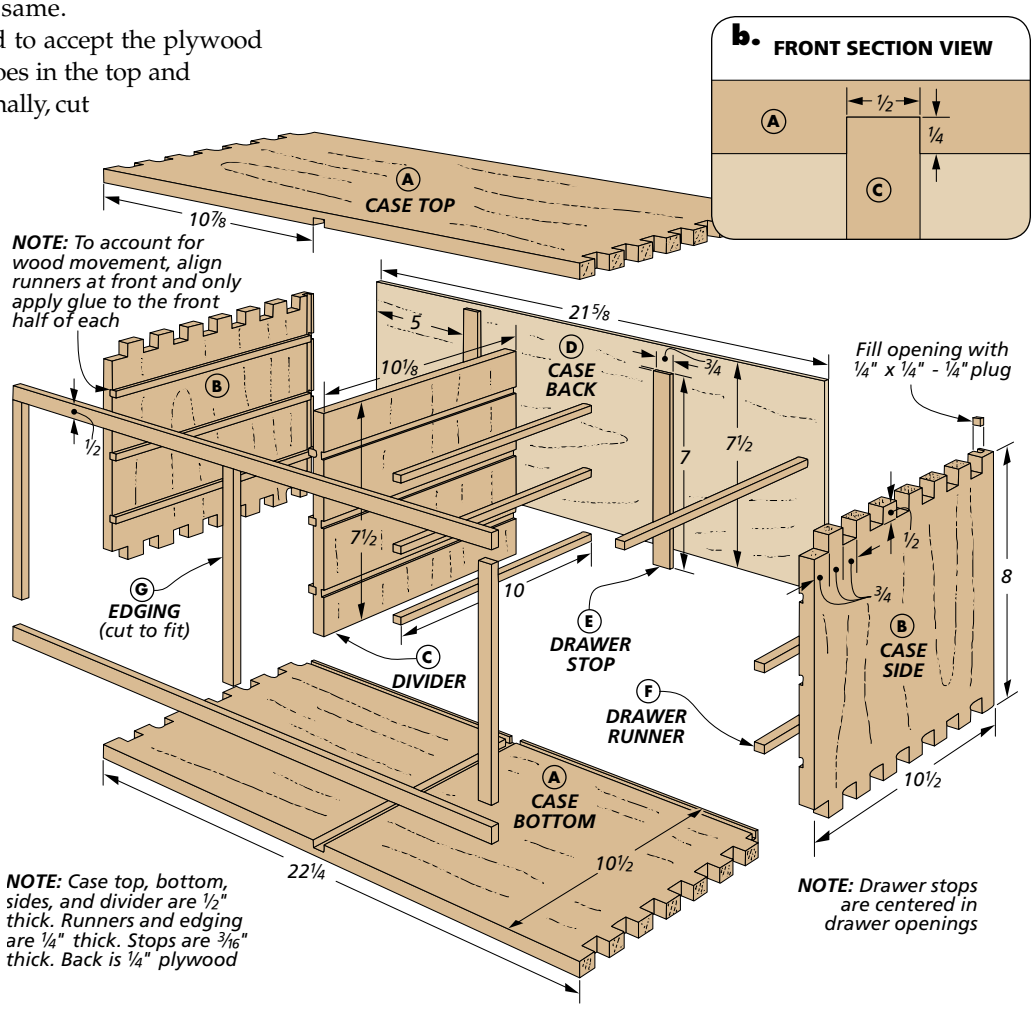

 ©2014 August Home Publishing. All rights reserved.

ADD THE DRAWERS

The six drawers that fit inside the case come next. The drawer front, back, and sides are the same dimensions. You can make them by planing or resawing mahogany to ¼" thick. Then cut them to size.

The drawers' box joints are ¼" x ¼", so make them exactly as is shown in the issue on page 14. There's also a groove in all four parts to hold the plywood bottom (detail 'b'), and a cutout that serves as a finger pull on the drawer front (detail 'a'). Finally, a centered groove on the sides fits over the drawer runners. After these cuts, cut the plywood bottoms to size, and rabbet the ends and edges (detail 'b'). Then assemble the drawers.

There are a few tasks left to complete the drawers. First, use a sharp chisel to notch the drawer backs to match the grooves in the sides. There are also four openings near the bottom corners of the drawers, which can be filled with tiny plugs.

GRID STRIPS. Each drawer is sub-divided into nine compartments with interlocking grid strips (see detail 'c'). The strips can be resawn or planed to thickness. Cutting the interlocking notches is just a matter of stacking a few at a time against an auxiliary miter gauge fence, carefully lining them up with a standard-kerf blade, and then making the cut. Repeat until all the grid strips are complete.

After applying stain and finish, the jewelry box simply rests at the bottom of the cabinet. W

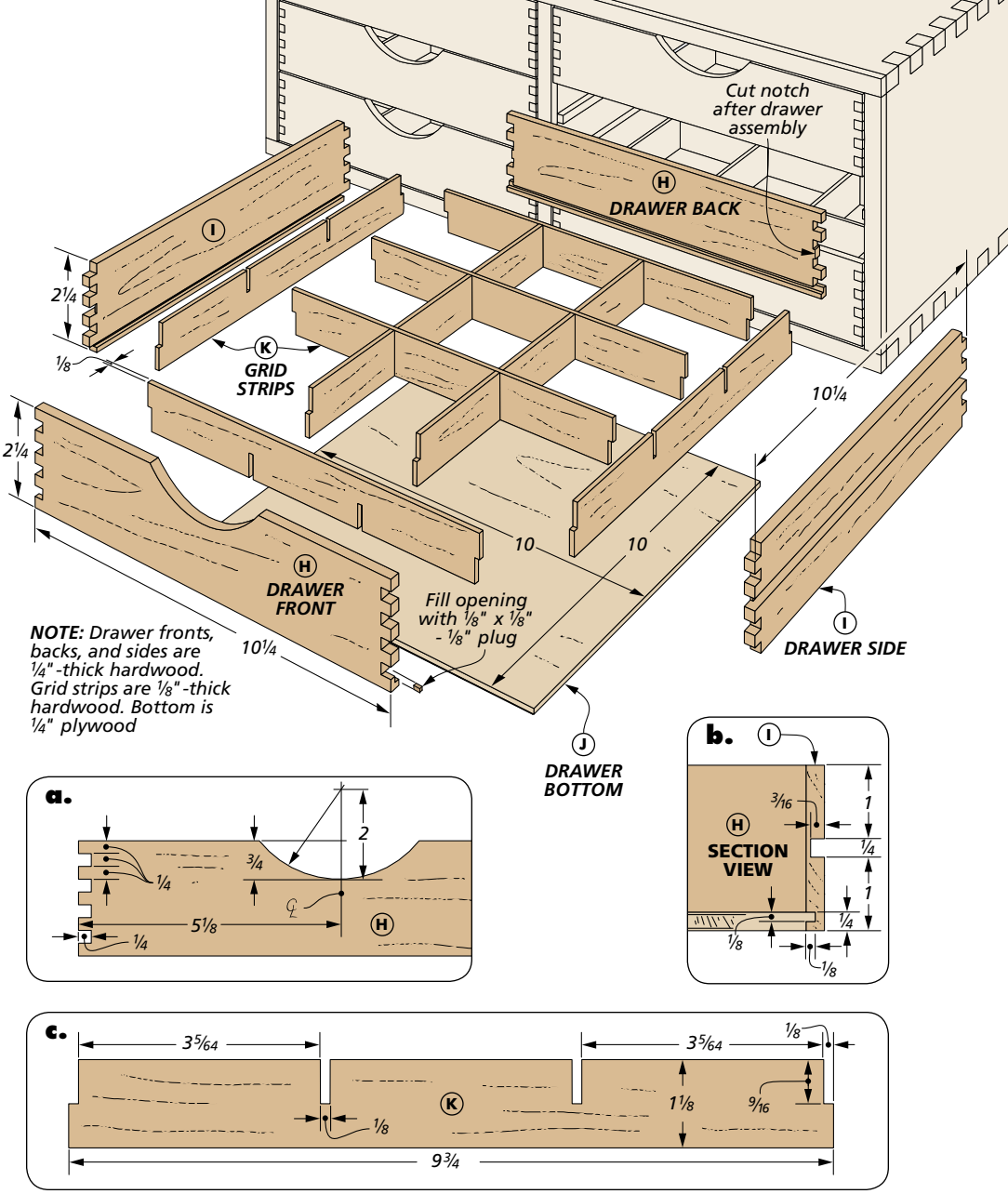

Materials, Supplies & Cutting Diagram

A	Case Top/Bottom (2)	½ x 10½ - 22¼
B	Case Sides (2)	½ x 10½ - 8
C	Case Divider (1)	½ x 10⅛ - 7½
D	Case Back (1)	¼ ply. - 7½ x 21¾
E	Drawer Stops (2)	3/16 x ¾ - 7
F	Drawer Runners (12)	¼ x 11/32 - 10
G	Edging	¼ x ½ - 75 rgh.
H	Drawer Fronts/Backs (12)	¼ x 2¼ - 10¼
I	Drawer Sides (12)	¼ x 2¼ - 10¼
J	Drawer Bottoms (6)	¼ ply. - 10 x 10
K	Grid Strips (48)	⅛ x 1⅛ - 9¾

- (4) Chain Carousels (Lee Valley 01B15.01)

ALSO NEEDED: *One 24" x 48" Sheet of ¼" Baltic Birch Plywood*

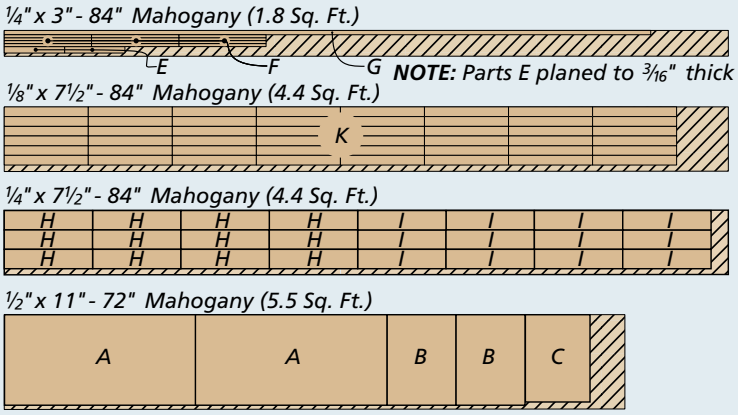

 ©2014 August Home Publishing. All rights reserved.

looking inside
Final Details

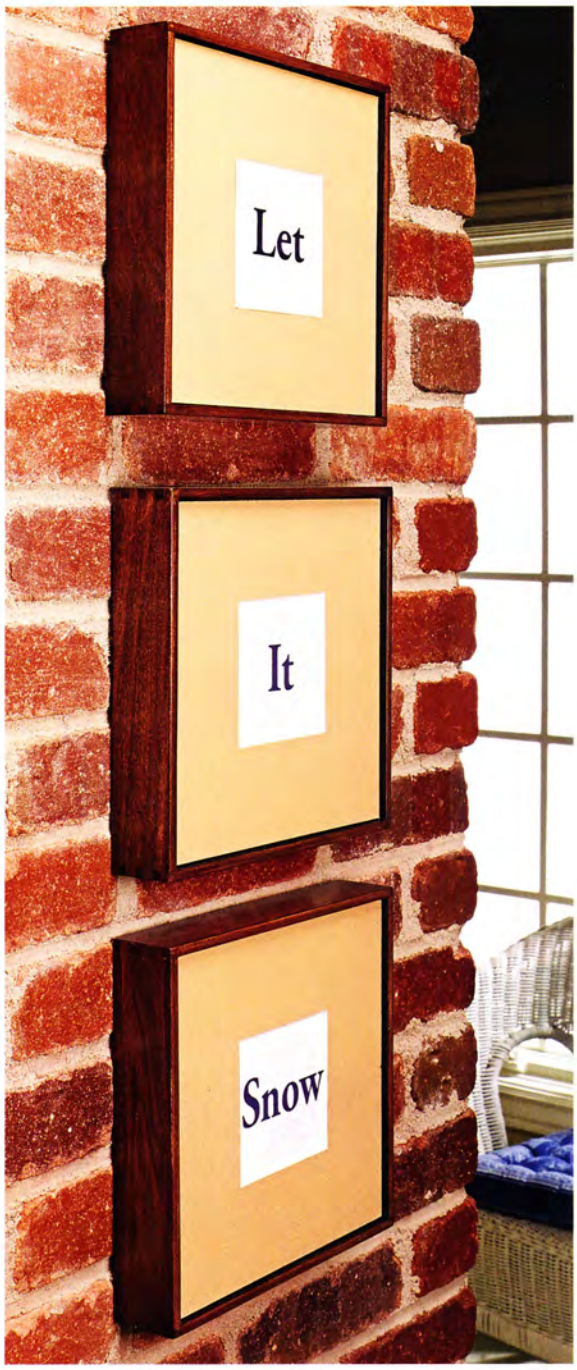

▲ *Picture Frames.* Simple box joint construction allows you to turn out a set of these picture frames in a weekend. You'll find everything you need to know for building them starting on page 17.

▲ *Coffee Table.* The modular design of this coffee table allows you to arrange it in different configurations to suit your needs. And the open space below provides plenty of storage. Plans start on page 20.

▲ *Cabinet on Stand.* Gentle curves, simple molding profiles, and straigl. forward construction give this cabinet an understated elegance. We'll walk you through every step of building it beginning on page 30.